This is a digital copy of a book that was preserved for generations on library shelves before it was carefully scanned by Google as part of a project to make the world's books discoverable online.

It has survived long enough for the copyright to expire and the book to enter the public domain. A public domain book is one that was never subject to copyright or whose legal copyright term has expired. Whether a book is in the public domain may vary country to country. Public domain books are our gateways to the past, representing a wealth of history, culture and knowledge that's often difficult to discover.

Marks, notations and other marginalia present in the original volume will appear in this file - a reminder of this book's long journey from the publisher to a library and finally to you.

Usage guidelines

Google is proud to partner with libraries to digitize public domain materials and make them widely accessible. Public domain books belong to the public and we are merely their custodians. Nevertheless, this work is expensive, so in order to keep providing this resource, we have taken steps to prevent abuse by commercial parties, including placing technical restrictions on automated querying.

We also ask that you:

+ *Make non-commercial use of the files* We designed Google Book Search for use by individuals, and we request that you use these files for personal, non-commercial purposes.
+ *Refrain from automated querying* Do not send automated queries of any sort to Google's system: If you are conducting research on machine translation, optical character recognition or other areas where access to a large amount of text is helpful, please contact us. We encourage the use of public domain materials for these purposes and may be able to help.
+ *Maintain attribution* The Google "watermark" you see on each file is essential for informing people about this project and helping them find additional materials through Google Book Search. Please do not remove it.
+ *Keep it legal* Whatever your use, remember that you are responsible for ensuring that what you are doing is legal. Do not assume that just because we believe a book is in the public domain for users in the United States, that the work is also in the public domain for users in other countries. Whether a book is still in copyright varies from country to country, and we can't offer guidance on whether any specific use of any specific book is allowed. Please do not assume that a book's appearance in Google Book Search means it can be used in any manner anywhere in the world. Copyright infringement liability can be quite severe.

About Google Book Search

Google's mission is to organize the world's information and to make it universally accessible and useful. Google Book Search helps readers discover the world's books while helping authors and publishers reach new audiences. You can search through the full text of this book on the web at `http://books.google.com/`

D 1,143,788

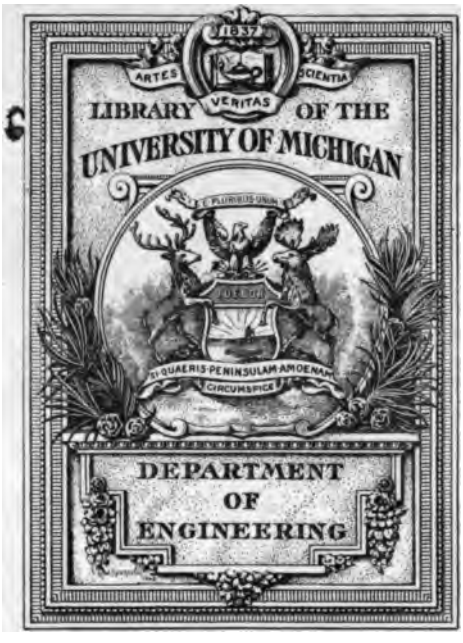
1837
ARTES
SCIENTIA
VERITAS
LIBRARY OF THE
UNIVERSITY OF MICHIGAN
E PLURIBUS UNUM
TUEBOR
SI QUAERIS PENINSULAM AMOENAM
CIRCUMSPICE
DEPARTMENT
OF
ENGINEERING

VM
1
.N87

TRANSACTIONS

OF THE

NORTH-EAST COAST INSTITUTION

OF

ENGINEERS AND SHIPBUILDERS.

EDITED BY THE SECRETARY OF THE INSTITUTION.

VOLUME XV.

FIFTEENTH SESSION, 1898-99.

THE RIGHT OF PUBLICATION AND TRANSLATION IS RESERVED.

LONDON AND NEWCASTLE-UPON-TYNE:
ANDREW REID & COMPANY, LIMITED, PRINTERS AND PUBLISHERS.

1899.

ADVERTISEMENT.

"The Institution merely places on record, and is not, as a body, responsible for the statements or opinions advanced in the Papers read, or the Discussions thereon, which occur at the Meetings during the Session."

CONTENTS OF VOLUME XV.

FIFTEENTH SESSION, 1898-99.

	PAGE.
Alphabetical List of Names of Writers of Papers and Speakers	vi
List of Publications added to Library	ix
„ Officers, 1898-99	xv
„ Committees, etc., 1898-99	xvi
„ Honorary Members...	xvii
„ Members, July, 1899	xvii
„ Associates, „	xli
„ Graduates, „	xlv
Constitution and Bye-Laws	xlix
Supplementary Bye-Laws relating to Graduate Section	lxvii
Library and Reading Room Rules...	lxx
Proceedings at General Meetings 1, 29, 59, 77, 111, 137, 173, 201, 233	
Council Report for Fourteenth Session	5
Financial Statement	8
INSTITUTION DINNER	47
Sessional Awards	60, 112
Visit to the Central Marine Engine Works, West Hartlepool	73
Closing Business of the Session	257
Report of Lloyd's Technical Sub-Committee	259
Appointment of New Representatives on Lloyd's Technical Sub-Committee	60
MEMOIRS	263

PAPERS READ DURING THE SESSION.

1898.	
Oct. 14th.—PRESIDENT'S INAUGURAL ADDRESS	13
Vote of Thanks to President	24
Nov. 18th.—Paper "ON SOME FEATURES OF THE REPAIRS AND CONSTRUCTION OF IRON AND STEEL SHIPS," by Mr. M. W. Aisbitt	31
Discussion	36
Dec. 16th.—Discussion continued	61
1899.	
Jan. 21st.—Mr. M. W. Aisbitt's Reply	81
1898.	
Dec. 16th.—Paper "ON AN IMPROVED METHOD OF STRENGTHENING COPPER STEAM PIPES," by Mr. T. Messenger	67
Discussion	69

152768

1899.		PAGE.
Feb. 17th.	Mr. T. Messenger's Reply	113
Jan. 21st.	Paper "On Works' Organisation," by Mr. Tom Westgarth	87
	Discussion	92
Feb. 17th.	Discussion continued	115
Mar. 24th.	Mr. Tom Westgarth's Reply	139
Feb. 17th.	Paper on "Some Considerations on Freeboard and on the Relation between Scantlings and Freeboard," by Mr. Archibald Hogg	125
	Discussion	132
Mar. 24th.	Discussion continued	141
April 21st.	Mr. Archibald's Hogg's Reply	175
Mar. 24th.	"Notes on the Manufacture of Shafting for Screw Steamers, with Some Causes of Defects and Failures," by Mr. Edward C. Chaston	149
Mar. 24th.	"Remarks on the Increasing Frequency of Failure of Propeller Shafts," by Mr. Frank Caws	161
	Discussion	167
April 21st.	Discussion continued	179
May 3rd.	Discussion continued	203
May 12th.	Mr. E. C. Chaston's Reply	235
May 12th.	Mr. Frank Caws's Reply	243
May 3rd.	Paper on "Shop and General Establishment Charges in Engineering Works and their Relation to Costs and Estimates," by Mr. W. E. Cowens	221
	Discussion	227
May 12th.	Mr. W. E. Cowens's Reply	255

LIST OF PLATES.

PLATES TO ILLUSTRATE PAPERS ON—	PLATES.
"Repairs and Construction of Iron and Steel Ships"	I.
"An Improved Method of Strengthening Copper Steam Pipes"	II.
"Notes on Shafting for Screw Steamers"	III. to VI.
"Remarks on the Increasing Frequency of Failure of Propeller Shafts"	VII. and VIII.

ALPHABETICAL LIST OF WRITERS OF PAPERS AND SPEAKERS.

Name.	Name of Paper or Subject under Discussion.	Page.
Aisbitt, M. W. ..	On Some Features of the Repairs and Construction of Iron and Steel Ships ...	31
,, ...	Reply to the Discussion on some Features of the Repairs and Construction of Iron and Steel Ships	81
Andrew, D.	Manufacture of Shafting for Screw Steamers ...	170
,, ...	Increasing Frequency of Failure of Propeller Shafts	215
Arnison, G. N. ...	Repairs and Construction of Iron and Steel Ships	64
,, ...	Strengthening Copper Steam Pipes	71
Borrowman, W. C. ...	Visit to the Central Marine Engine Works ...	79
,, ..	Works' Organisation	95
Boyd, W.	Vote of Thanks to President for Inaugural Address	24
Browne, Sir B. C. ...	Death of Sir William Gray	3
,, ...	President's Inaugural Address...	13
,, ...	Acknowledgment of Vote of Thanks for Address	27
,, ...	Institution Dinner	51, 56
,, ..	Visit to the Central Marine Engine Works ...	78
,, ...	Works' Organisation	92, 121
,, ...	Relation between Scantlings and Freeboard ...	147
,, ...	Shop and General Establishment Charges ...	231
Buckland, H. B. ..	Manufacture of Shafting for Screw Steamers ..	218
Cairns, C. W.... ...	Works' Organisation	102
,, ...	Manufacture of Shafting for Screw Steamers ...	211
Caws, F.	Remarks on the Increasing Frequency of Failure of Propeller Shafts	161
,, ...	Reply to the Discussion on the Increasing Frequency of Failure of Propeller Shafts	243
Chaston, E. C. ...	Notes on the Manufacture of Shafting for Screw Steamers, with some Causes of Defects and Failures	149
,, ...	Reply to the Discussion on the Manufacture of Shafting for Screw Steamers	235
Cleveland, Admiral ...	Institution Dinner	53
Cowens, W. E. ...	Works' Organisation	117
,, ..	Shop and General Establishment Charges in Engineering Works and their Relation to Costs and Estimates	221
,, ...	Reply to Discussion on Shop and General Establishment Charges	255

Name.	Name of Paper or Subject under Discussion.	Page.
Dalrymple, W.	Works' Organisation	120
Donovan, J. W.	Increasing Frequency of Failure of Propeller Shafts	214
Doxford, W. Theo.	Sub-Committee for Lloyd's Register	60
,,	Repairs and Construction of Iron and Steel Ships	65
Fothergill, J. R.	Vote of Thanks to President for Inaugural Address	26
,,	Repairs and Construction of Iron and Steel Ships	38
,,	Institution Dinner	56
,,	Strengthening Copper Steam Pipes	69
,,	Visit to Central Marine Engine Works	78
,,	Works' Organisation	97
,,	Manufacture of Shafting for Screw Steamers ...	187
Fownes, H.	Works' Organisation	115
,,	Manufacture of Shafting for Screw Steamers ...	192
,,	Shop and General Establishment Charges ...	227
Heck, J. H.	Relation between Scantlings and Freeboard ...	135
,,	Manufacture of Shafting for Screw Steamers ...	203, 206
Henderson, A. H.	Works' Organisation	107
Hogg, A.	Some Considerations on Freeboard and on the Relation between Scantlings and Freeboard	125
,,	Reply to the Discussion on the Relation between Scantlings and Freeboard	147, 175
Hunter, G. B.	Repairs and Construction of Iron and Steel Ships	43
Hunter, Summers	Works' Organisation	92, 100
James, M. C.	Repairs and Construction of Iron and Steel Ships	36
,,	Relation between Scantlings and Freeboard ...	133
Lord Bishop of Newcastle-on-Tyne	Institution Dinner	48
Landreth, C.	Repairs and Construction of Iron and Steel Ships	62
Mayor of Newcastle-upon-Tyne	Institution Dinner	55
MacColl, Hugo	Strengthening Copper Steam Pipes	69
,,	Manufacture of Shafting for Screw Steamers ..	196
Mace, W.	Manufacture of Shafting for Screw Steamers ..	167
Manuel, W.	Manufacture of Shafting for Screw Steamers ...	213
Messenger, T.	On an Improved Method of Strengthening Copper Steam Pipes	67
,,	Reply to the Discussion on Strengthening Copper Steam Pipes	113
Mills, W.	Works' Organisation	105
Milton, J. T.	Manufacture of Shafting for Screw Steamers ...	179, 191
Mulherion, G. F.	Shop and General Establishment Charges ...	228
Myles, D.	Works' Organisation	118
Rennoldson, C.	Relation between Scantlings and Freeboard ...	132
Rennoldson, J. M.	Relation between Scantlings and Freeboard ...	132
,,	Manufacture of Shafting for Screw Steamers ...	169
Richardson, Sir Thos.	Institution Dinner	52
Richardson, Wigham	Vote of Thanks to President for Inaugural Address	25
,,	Institution Dinner	54
Seaman, C. J.	Shop and General Establishment Charges ...	230
Sisson, W.	Manufacture of Shafting for Screw Steamers ...	209
Spence, W. G.	Works' Organisation	100
Stevenson, W.	Repairs and Construction of Iron and Steel Ships	61
,,	Strengthening Copper Steam Pipes	71
Stewart, Jas.	Manufacture of Shafting for Screw Steamers ...	204

Name.	Name of Paper or Subject under Discussion.	Page.
Thearle, S. J. P. ...	Repairs and Construction of Iron and Steel Ships	40
,, ...	Relation between Scantlings and Freeboard ...	141
Thompson, Jas. ..	Strengthening Copper Steam Pipes	72
Walliker, J. F. ...	Repairs and Construction of Iron and Steel Ships	61
Wallis, R.	Works' Organisation	103
Weighton, R. L. ...	Manufacture of Shafting for Screw Steamers ...	206
Westgarth, Tom ...	On Works' Organisation	87
,, ...	Reply to Discussion on Works' Organisation ...	105, 139
Willcox, R. F. C. ...	Repairs and Construction of Iron and Steel Ships	63
,, ...	Strengthening Copper Steam Pipes	70
,, ...	Manufacture of Shafting for Screw Steamers ...	194
Withy, H.	Works' Organisation	99

BOOKS AND TRANSACTIONS OF LEARNED SOCIETIES ADDED TO THE LIBRARY.

BOOKS.

Dynamo Electric Machinery. Weiner. 1898.
The Ironfounder. S. Bolland. 1893.
Heat Efficiency. Donkin.
Locomotive Mechanism and Engineering. H. C. Reagan, Jun. 1896.
Slide Valves. C. W. MacCord, Jun. 1897.
Centrifugal Pumps. T. Richardson. 1894.
Northumbria—Lectures on History, Literature, and Art. 1898.
Electrical Engineering (new edition). Slingo and Brooker. 1898.
Marine Boilers. Bertie and Robinson. 1898.
Practical Treatise on the Movement of Slide Valves by Eccentrics. C. W. MacCord. 1883.
Electrical Railways and Tramways. P. Dawson. 1897.
Kinematics of Mechanical Movements. C. W. MacCord. 1896.
Heat in its Mechanical Application (excerpt Proceedings Institution of Civil Engineers). 1885.
Brassey's Naval Annual. 1899.
Transactions of the Institution of Civil Engineers. vols.

TRANSACTIONS.

AMERICAN SOCIETY OF NAVAL ARCHITECTS, Vol. XI., 1899, No. 1.—Recent Advances in the Manufacture of High-Grade Boilers and Pipe Material. Water Tube Boilers. The Production of Metallic Tubes. Indicator Diagrams of Multiple Expansion Engines. Electrical Propulsion for Torpedo Boats. Automatic Stokers for Marine Use. Test of a Diesel Motor. Official Report. Valuation of Coals. Shrink and Force Fits. Direct Utilization of Producer Gas in Europe. Cylinder Ratios for Compound Engines. Rope Driving. Special Nickel, Chromium and Silicon Steels. Early Steamboats. Malleable Cast Iron. Electrically Operated 150-Ton Jib Crane in Newport News Shipyard.

AMERICAN SOCIETY OF NAVAL ENGINEERS, Vol. X., No. 2.—Entropy and Temperature. Entropy Diagrams. Submarine Torpedo Boat "Plunger." Oil Fuel Experiments on Hydraulic Lifeboat "Queen." American Steam Yachts. Economy of Electric Lamps. Novel Arrangement of Feed-water Heater in Water Tube Boilers. U.S.S. "Fulton." Recent Trials of the Cruiser "Diadem." Nickel Steel. The Yarrow-Schlick-Tweedy System of Balancing Engines. Experiments on the Effect of Direction of Turning in Twin Screws. The U.S. Torpedo Boats "Talbot" and "Gwin." U.S. Torpedo Boat "Morris." No. 3.—Recent Performance of the U.S.S. "Oregon." Water Tube Boilers. Experiments on the Compression of Steam in the Clearance Space. Investigation of Distortion and Resistance of Flat Heads. Remarkable Economy Test of a Large Cotton Mill Engine. Vickers' Guns. The Stettin Floating Graving Dock. Basic Refined Steel on the Continent. The Tropenos

Process of Steel Casting. Protection of Steam Heated Surfaces. The Problem of Combustion in Water Tube Boilers and a Means of its Solution. Cost of Transportation on the Lakes. Novel Type of Towing Steamers and Barges for Service on the Yukon. The First Battle between Modern Ironclads. Manufacture of Aluminium.

CANADIAN SOCIETY OF CIVIL ENGINEERS, Vol. XII., Part 1.—The Main Gut. Electrical Power Transmission. Meters. Notes on Belting. Wind Stresses in a Three-Hinged Arch. Hydraulic Laboratory at McGill University. Commercial Aspect of Electrical Transmissions.

CIVIL ENGINEERS, Vol. CXXXII., 1897-8, Part 2.—Land Slides in the Canadian Pacific Railway in B.C. A New Transmission Dynamometer. Machinery used in the Manufacture of Cordite. Reservoirs with High Earthen Dams in West India. Vol. CXXXIII., 1897-8, Part 3.—The Security of some Locomotive Fire Boxes. The Stability of Channels Through Sandy Estuaries. Theory, Design, and Working of Alternate-current Motors. Dublin Electric Tramway. Vol. CXXXV., 1898-9, Part 1.—The Extraction of Nickel from its own Ores by the Mond Process. Electrical Transmission of Power in Mining. The Effect of Subsidence due to Coal Workings upon Bridges and other Structures. Trial Survey for a Railway over the Outeniqua Mountains, Cape Colony. The Congo Railway. The Erection of a Steel Viaduct upon the Highland Railway. The Failure of the Embabch Bridge, Cairo. The Pahartali Locomotive and Carriage Works, Assam-Bengal Railway. River Regulation Works and Harbour and Canal Construction in Germany. The Management, Maintenance, and Cost of Public County Roads under the Irish Grand Jury System. Karachi Sewerage Works. Stresses in Pipes Bent at Right Angles Caused by Heating to the Temperature of Steam at Various Pressures. Note on the Endurance of Steel Bars Subjected to Repetitions of Tensional Stress. Blast-Furnaces.

CLEVELAND INSTITUTION OF ENGINEERS, 1897-8, No. 3.—Pumping Engines. No. 4.—The Workmen's Compensation Act of 1897. Session 1898-9, No. 1.—A Microscopical Study of Causes Inducing to Structural Fracture in Iron and Steel. No. 2.—Paper on the Ford and Moncur Hot Blast Stove. No. 3.—Paper on Water Cooling as Applied to Condensing. No. 4.—President's Address. The Mond Process for Extracting Nickel from its Ores.

GENIO CIVILE, Anno XXXVI., Fas. 4.—Papers on Engineering.

GIORNALE DEL GENIO CIVILE, Anno. XXXVII., 1899, Fas. 1-2.—Paper on Civil Engineering.

GLASGOW PHILOSOPHICAL SOCIETY, Vol. XXIX., 1897-8.—Report on the Royal Commission on Agricultural Depression. Life and Thought of Anglo-Saxon. England as Preserved in Contemporary Poetry. On Indian Economics. A Contribution to the History of Coal. Railway Survey Work in the Shire Highlands of B.C. Africa. The Indian Mints. Lord Kelvin's Patents. Degeneration and Regeneration of Nerves. Faradimeter for Measuring Alternating Currents for Theurapeutic use. Note on a New Instrument (Oliver's) for Estimating the Colouring Matter of Blood. The Present State of Deaf Mute Education. On the Bubonic Plague. Some Scientific Questions concerning Pictures. Glasgow Cathedral. The Aerial Transmission of the Enteric Fever Poison.

INGENIEURS CIVILS DE FRANCE, 1899, Nos. 2, 3, 4, 5, Bulletin.—Papers on Engineering.

IRON AND STEEL INSTITUTE, 1898, No. 1.—On the Use of Blast-Furnace Gas for Motive Power. On Coking in By-product Ovens. On the Relative Merits of Limestone and Lime in Blast-Furnace Practice. On Steel Permanent Way. On the Iron-ore Deposits of the Ural. On the Crystalline Structure of Iron and Steel. On Allotropic Iron and Carbon. On Brittleness in Soft Steel. On the Solution Theory of Iron and Steel.

JOURNAL OF THE AMERICAN SOCIETY OF NAVAL ARCHITECTS, Vol. XI., 1899, No. 2.—Test of a Babcock and Wilcox Boiler Built for the "Albert." Recent Trials of the Machinery of British Warships. The Endurance of the Ordinary Copper Alloys in Sea Water. Trials and Experiments made in H.M.S. "Argonaut." The Steam Trials of H.M.S. "Amphitrite." Steam Consumption of Auxiliary Engines in Warships. Comparative Thermal Efficiency of Steam Engines and Diesel Motors. Remarks on the Increasing Frequency of Failure of Propeller Shafts. Electricity on Board Ship. The Equipment of Tall Office Buildings in New York.

JOURNAL OF WESTERN SOCIETY OF ENGINEERS, Vol. III., 1898, No. 2.—The Evolution of the American Type of Water Wheel. Mechanical Plants of Large Buildings. Portland Cement. Fireproof Construction. Fireproofing of Warehouses. No. 3.—Electrical, Pneumatic, and Mechanical Power Transmission in Manufacturing Establishments. Guaging of Streams. Use of Coke Breeze in Sewage Purification. Obstructive Bridges and Docks in the Chicago River. Measuring Apparatus. King's County Survey, New York. No. 4.—Locomotive Water Supply. A Storage Reservoir for a Railroad Water Station. Park Bridges. A Comparison of the Hollow-bored Method and the Fluid Compression Hollow-forged Method of Making Steel Forgings. Vol. IV., No. 1.—The Manchester Ship Canal. The Mechanics of Suction Pipes. Rebuilding of the Kinzie Street Draw Bridge of the Chicago and North-Western Railway. Tables of Excessive Precipitation of Rain at Chicago. Establishing of Street Grades. 1899, No. 2.—Tables of Excessive Precipitations of Rain. Electrical Radiation. Effects of Different Speeds and Radii of Curves upon the Inclination of Bicycle Tracks. Bridge Designing.

L'ASSOCIATION DES INGÉNIEURS, Annuaire, Tome XI., No. 4; Annuaire, Tome XII., No. 1 and 2; Annuaire, Tome XI., No. 3; Bulletin, Tome XXI., No. 5, Tome XXII., No. 3 and 4.—Papers on Engineering. Bulletin, Tome XXIII., No. 3.

L'ASSOCIATION TECHNIQUE MARITIME, 1897, No. 8.—Papers on Engineering and Electricity.

LIVERPOOL ENGINEERING SOCIETY, Vol. XIX., 1898.—Electro-Zincing. Portland Cement. Aerial Rope Railways. Shallow Draught Steamers. Experiment on the Flow of Water. Engineering Survey Work. Telegraphy by Electric Waves Across Space. The Masonry Dam Problem.

MECHANICAL ENGINEERS, 1897, Nos. 3 and 4.—Cycle Construction. Birmingham Water Works. Quick Revolution Engines. Propeller Ventilating Fans. Diagram. Accounts.

NAVAL ARCHITECTS AND MARINE ENGINEERS (AMERICAN), Vol. VI., 1898.—The Standard Navy Boats. Bilge Keels and Rolling Experiments, U.S. "Oregon." Portable Pneumatic Riveters in Shipbuilding. Torpedo Boat Destroyers for Sea Service with Special Reference to the Conditions that prevail on the Pacific Coast. Economic Test of a Unique Form of Feed Pump. The Steam Yacht as a Naval Auxiliary. Designs of the New Vessels for the U.S. Navy. Methods of Securing

Water-tight Work. Tests of the Strength of a Longitudinal Bulkhead Separating Two Engine Rooms. An Electrically Operated 150-Ton Revolving Derrick. Stability of a Battleship under Damaged Conditions.

NOVA SCOTIAN INSTITUTE OF SCIENCE, Vol. IX., Part 4.—On the Calculation of the Conductivity of Aqueous Solutions Containing Potassium and Sodium Sulphates. Remarks on some Features of the Kentucky Flora. On the Relation of the Surface Tension and Specific Gravity of Certain Aqueous Solutions.

ROYAL DUBLIN SOCIETY, Vol. VIII., Part 6.—Proceedings: On the Geological Investigation of Submarine Rocks. Short Account of an Experiment to Determine the Exact Bosition in a Focus Tube from which the X-Rays are emitted. A New Method of Conferring Distinguishing characteristic Appearance upon Illuminated Buoys and Beacons for Harbours, Estuaries, and Rivers. The Comparative Values of Refracting and Reflecting Telescopes for Astrophysical Observations. A Mechanical Cause of Homogeneity of Structure and Symmetry Geometrically Investigated with Special Reference to Crystals. Arrangement of the Crystals of Certain Substances on Solidification. Phellia Sollosi. The Apparent Cometary Nature of the Spiral Nebulae in Caries Venatici. Transactions: Vol. VI., Part 14. —Jamaican Actiniaria. Part 1.—Zoantheop. Part 15.—Radiation Phenomena in a Strong Magnetic Field. Part 16.—The Actiniaria of Torres Straits. Vol. VII., Part 1.—A Determination of the Wave Lengths of the Principal Lines in the Spectrum of Gallium, showing their Identity with two lines in Solar Spectrum.

SOCIÉTÉ DES INGÉNIEURS CIVILS DE FRANCE, Bulletin, Nos. 7 and 8, 4 and 5.—Papers on Engineering, etc.

SOCIETY OF ENGINEERS. Transactions, 1898. General Index, 1857-1898.—Reservoir Embankments. The Protection of Underground Water Supplies. Gas-Works Machinery. Protective Metallic Coatings for Iron and Steel. The Preparation of Rhea Fibre for Textile Purposes.

SOUTH WALES INSTITUTE OF ENGINEERS, Vol. XX., No. 8.—Improvements in Winding Appliances. Further Notes on the Machinery Exhibits at the Cardiff Exhibition, 1896. Vol. XXI., 1898, No. 1.—On the Physical Analysis of Steel. No. 2.—Cost of Working Coal in the Transvaal. The Treatment of Sulphide Ores. Lectures on Mining. No. 3.—Condensing Arrangements at Collieries. Lectures on Mining. Shaft Sinking. Winding. Colliery Explosions. No. 4.—Wire Rope Conductors for Pit Cages. Endless Winding. Lectures on Mining. Methods of Working.

UNITED STATES NAVAL INSTITUTE, Vol. XXIV., 1898, No. 2.—Target Practice and the Training of Gun Captains. Diseases of Electrical Installations in the Navy. Some Aspects of Naval Administrations in War. International Law. Naval Captures. Naval Raids. No. 4.—The Mine Defence of Santiago Harbour. Pyro-Collodion Smokeless Powder. Diseases of Electrical Installation in the Navy. The Secondary Battery. Naval Reserves and Naval Volunteers. Views of Admiral Cervera Regarding the Spanish Navy in the late War. Comments of Rear-Admiral Plüddemann, German Navy, on the Main Features of the War with Spain. Vol. XXV., No. 1.—The St. Louis as a Transport. Sketches from the Spanish-American War. The Last Naval Engagement of the War. Some Experiences on a U.S. Naval Tug-boat. Battles and Capitulation of Santiago de Cuba.

PUBLICATIONS RECEIVED TO DATE, CURRENT NUMBERS OF WHICH LIE ON THE TABLES OF THE READING ROOM:—

Cassier's Magazine, 33, Bedford Street, Strand, London, W.C.
Electrical Engineer, 139, Salisbury Court, Fleet Street, London, E.C.
Electrical Review, 22, Paternoster Row, London, E.C.
Engineering, 35 and 36, Bedford Street, Strand, London, W.C.
Engineers' Gazette, 36, Fawcett Street, Sunderland.
Fairplay, 34, Leadenhall Street, London, E.C.
Indian and Eastern Engineer, 50, Fenchurch Street, London, E.C.
Indian Engineering, c/o F. E. Robertson, Esq., 3, Great George Square, Westminster, London, S.W.
Industries and Iron, 39 and 40, Shoe Lane, London, E.C.
Journal de la Marine le Yacht, 55 Rue de Châteaudun, Paris.
Marine Engineer, 3, Amen Corner Paternoster Row, London, E.C.
Mechanical World, New Bridge Street, Manchester.
Rivista Marittima, Rome.
Shipping World, Effingham House, Arundel Street, London, E.C.
Stahl und Eisen, Düsseldorf.
Syren, 128, Hope Street, Glasgow.
The Colliery Guardian, 49, Essex Street, Strand, London, W.C.
The Steamship, 2, Custom House Chambers, Leith.
The Electrician, 1, Salisbury Court, Fleet Street, London, E.C.
The Engineer, 33, Norfolk Street, Strand, London, W.C.
The Engineering Magazine, 222, Strand, London, W.C.
The Mariner, 22, Buckingham Street, Strand, London, W.
The Mechanical Engineer, Hodson's Court, Corporation Street, Manchester.
The Practical Engineer, 31, Whitworth Street, Manchester.
Transport, 28, Victoria Street, London, S.W.

BOUND COPIES OF THE TRANSACTIONS ARE PRESENTED TO THE FOLLOWING LIBRARIES:—

The British Museum, London.
Literary and Philosophical Society, Newcastle-upon-Tyne.
The Free Libraries of Newcastle-upon-Tyne, Gateshead, South Shields, Sunderland, and Wallsend.
The Bodleian Library, Oxford.
The University Library, Cambridge.
The Advocates' Library, Edinburgh.
The Library of Trinity College, Dublin.
} G. W. Eccles, 36, Great Russell Street, London, W.C.
The Patent Office Library, 25, Southampton Buildings, Chancery Lane, London.
The Subscription Literary Society, Fawcett Street, Sunderland.
The Durham College of Science, Barras Bridge, Newcastle-upon-Tyne.
The Rutherford College, Bath Lane, Newcastle-upon-Tyne.

LIST OF OFFICERS

[illegible] SESSION [illegible]

President—[illegible]

Past-Presidents:

[illegible]

Vice-Presidents:

[illegible]

Honorary Treasurer—[illegible]

Committee

[illegible]

Honorary Librarian:—[illegible]

Secretary and Treasurer:—[illegible]

Scientific Section:

Chairman—[illegible]

Hon. Secretary—[illegible]

Committee:

[illegible]

Office, Library, and Lecture Room:

[illegible]

BOUND COPIES OF THE TRANSACTIONS ARE PRESENTED TO THE FOLLOWING LIBRARIES:—

The British Museum, London.
Literary and Philosophical Society, Newcastle-upon-Tyne.
The Free Libraries of Newcastle-upon-Tyne, Gateshead, South Shields, Sunderland, and West Hartlepool.
The Bodleian Library, Oxford.
The University Library, Cambridge.
The Advocates' Library, Edinburgh.
The Library of Trinity College, Dublin.
} G. W. Eccles, 96, Great Russell Street, London, W.C.
The Patent Office Library, 25, Southampton Buildings, Chancery Lane, London.
The Subscription Literary Society, Fawcett Street, Sunderland.
The Durham College of Science, Barras Bridge, Newcastle-upon-Tyne.
The Rutherford College, Bath Lane, Newcastle-upon-Tyne.

LIST OF OFFICERS.

FIFTEENTH SESSION, 1898-99.

President:—SIR BENJAMIN C. BROWNE, D.C.L., J.P.

Past-Presidents:

WILLIAM BOYD, J.P. (1884-86).
W. THEO. DOXFORD, M.P., J.P. (1886-88).
F. C. MARSHALL, J.P. (1888-90).
WIGHAM RICHARDSON, J.P. (1890-92).
ROBERT THOMPSON, J.P. (1892-94).
SIR THOMAS RICHARDSON, B.A., M.P., J.P. (1894-96).
COL. HENRY F. SWAN, J.P. (1896-98).

Vice-Presidents:

G. H. BAINES, J.P.
W. J. BONE.
G. CLARK, J.P.
A. COOTE, J.P.
EDWIN W. DE RUSETT.
JOHN DICKINSON, J.P.
C. D. DOXFORD.
W. H. DUGDALE.
J. R. FOTHERGILL.
HENRY FOWNES.
G. B. HUNTER.
ARTHUR LAING, J.P.
D. B. MORISON.
JOSEPH M. RENNOLDSON, J.P.
JOHN TWEEDY, J.P.
COL. P. WATTS.
T. WESTGARTH.
R. L. WEIGHTON, M.A.

Honorary Treasurer:—G. E. MACARTHY.

Councilmen:

ROBERT P. DOXFORD.
JOHN H. HECK.
W. HÖK.
SUMMERS HUNTER.
M. C. JAMES.
W. C. MOUNTAIN.
ROBERT HOME MUIR.
P. PHORSON.
CHARLES RENNOLDSON.
H. B. ROWELL.
M. SANDISON.
A. G. SCHAEFFER.
G. W. SIVEWRIGHT.
W. G. SPENCE.
ROBERT WALLIS.

Assistant Librarian:—H. S. WALLACE.

Secretary and Treasurer:—JOHN DUCKITT.

Graduate Section:

Chairman—ROBERT HINCHLIFFE.
Hon. Secretary—BRUCE G. NICHOL.

Committee:

F. A. EDMINSON.
WILLIAM LUMLEY.
F. G. RAPPOPORT.
F. W. G. SNOW.
W. H. WADDINGHAM

Offices, Library, and Lecture Room:

4, St. Nicholas' Buildings West, Newcastle-upon-Tyne.

BOUND COPIES OF THE TRANSACTIONS ARE PRESENTED TO THE FOLLOWING LIBRARIES:—

The British Museum, London.
Literary and Philosophical Society, Newcastle-upon-Tyne.
The Free Libraries of Newcastle-upon-Tyne, Gateshead, South Shields, Sunderland, and West Hartlepool.
The Bodleian Library, Oxford.
The University Library, Cambridge.
The Advocates' Library, Edinburgh.
The Library of Trinity College, Dublin.
} G. W. Eccles, 96, Great Russell Street, London, W.C.
The Patent Office Library, 25, Southampton Buildings, Chancery Lane, London.
The Subscription Literary Society, Fawcett Street, Sunderland.
The Durham College of Science, Barras Bridge, Newcastle-upon-Tyne.
The Rutherford College, Bath Lane, Newcastle-upon-Tyne.

LIST OF OFFICERS.

FIFTEENTH SESSION, 1898-99.

President:—Sir BENJAMIN C. BROWNE, D.C.L., J.P.

Past-Presidents:

WILLIAM BOYD, J.P. (1884-86).
W. THEO. DOXFORD, M.P., J.P. (1886-88).
F. C. MARSHALL, J.P. (1888-90).
WIGHAM RICHARDSON, J.P. (1890-92).
ROBERT THOMPSON, J.P. (1892-94).
Sir THOMAS RICHARDSON, B.A., M.P., J.P. (1894-96).
Col. HENRY F. SWAN, J.P. (1896-98).

Vice-Presidents:

G. H. Baines, J.P.
W. J. Bone.
G. Clark, J.P.
A. Coote, J.P.
Edwin W. De Rusett.
John Dickinson, J.P.
C. D. Doxford.
W. H. Dugdale.
J. R. Fothergill.
Henry Fownes.
G. B. Hunter.
Arthur Laing, J.P.
D. B. Morison.
Joseph M. Rennoldson, J.P.
John Tweedy, J.P.
Col. P. Watts.
T. Westgarth.
R. L. Weighton, M.A.

Honorary Treasurer:—G. E. Macarthy.

Councilmen:

Robert P. Doxford.
John H. Heck.
W. Hök.
Summers Hunter.
M. C. James.
W. C. Mountain.
Robert Home Muir.
P. Phorson.
Charles Rennoldson.
H. B. Rowell.
M. Sandison.
A. G. Schaeffer.
G. W. Sivewright.
W. G. Spence.
Robert Wallis.

Assistant Librarian:—H. S. Wallace.

Secretary and Treasurer:—John Duckitt.

Graduate Section:

Chairman—Robert Hinchliffe.
Hon. Secretary—Bryce G. Nichol.

Committee:

F. A. Edminson.
William Lumley.
F. G. Rappoport.
F. W. G. Snook.
W. H. Waddingham.

Offices, Library, and Lecture Room:

4, St. Nicholas' Buildings West, Newcastle-upon-Tyne.

COMMITTEES.

FIFTEENTH SESSION, 1898–99.

The President is *ex-officio* a Member of all Committees.

Finance Committee:

WILLIAM BOYD (Chairman).

E. W. DE RUSETT.
W. H. DUGDALE.
J. R. FOTHERGILL.
J. M. RENNOLDSON.
ROBERT THOMPSON.
GEORGE E. MACARTHY (Hon. Treasurer).

Reading Committee:

E. W. DE RUSETT.
W. H. DUGDALE.
J. R. FOTHERGILL.
J. H. HECK.
R. H. MUIR.
ROBERT WALLIS.

Library Committee:

W. G. SPENCE (Chairman).

M. C. JAMES.
P. PHORSON.
A. G. SCHAEFFER.
JAMES THOMSON.

Graduates' Award Committee:

HENRY FOWNES.
J. H. HECK.
M. C. JAMES.
M. SANDISON.
R. L. WEIGHTON, M.A.

Representatives on Lloyd's Sub-Committee:

WILLIAM BOYD.
F. C. MARSHALL.
ROBERT THOMPSON.
HENRY WITHY.

Representatives on the Consultative Committee to the Board of Trade:

J. H. IRWIN.
D. B. MORISON.
COL. JOHN PRICE.
COL. HENRY F. SWAN.

Representative on Council of Durham College of Science:

JOHN GRAVELL.

presentatives on Sub-Committee of Northumberland County Technical Education Committee:

RS HUNTER.
GEORGE E. MACARTHY.

NORTH-EAST COAST INSTITUTION OF ENGINEERS AND SHIPBUILDERS.

List of Members, July, 1899.

EXPLANATION.

(A.)	Agent and Accountant.	(I. & S. M.)	Iron and Steel Merchants and Manufacturers.
(B. B.)	Boiler Builder.	(M.)	Merchant.
(C. E.)	Civil and Consulting Engineer.	(M. S.)	Marine Superintendent.
(E.)	Engineer and Boilermaker.	(N. A.)	Naval Architect.
(E. A.)	Engineering Agent.	(R. M.)	Rope Manufacturer.
(E. E.)	Electrical Engineer.	(S.)	Shipbuilder.
(F. M.)	Forge Master.	(S. O.)	Ship Owner.
		(SUR.)	Engineer & Ship Surveyor.

HONORARY MEMBERS.

	ELECTED.
The Right Honourable Lord Armstrong, C.B., D.C.L., F.R.S., Cragside, Rothbury	Nov. 1884
The Right Honourable the Earl of Ravensworth, Ravensworth Castle, near Gateshead-on-Tyne...	Nov. 1884
Sir W. H. White, K.C.B., LL.D., F.R.S., The Admiralty, Whitehall, London ... ... (N A)	Nov. 1884
The Right Honourable the Earl of Hopetoun, G.C.M.G., Hopetoun House, South Queensferry, N.B....	Nov. 1897

MEMBERS.

A.

Abey, Henry, Fairfield, York Road, West Hartlepool ... ... (E)		Jan. 1889
Adams, Cecil T., c/o Messrs. The N.E. Marine Engineering Co., Northumberland Works, Wallsend-on-Tyne (E)	Graduate,	Oct. 1891
	Member,	Nov. 1897
Adams, Dawson, c/o Messrs. The National Electric Supply Co., Ltd., Bushell Street, Preston, Lancashire (E E)	Graduate,	Oct. 1894
	Member,	Dec. 1897
Adamson, Alex., c/o Messrs. Vickers, Sons & Maxim, Naval Construction Works, Barrow-in-Furness ... ... (S)		Nov. 1885
Adamson, Daniel, c/o Messrs. Joseph Adamson & Co., Hyde, Cheshire ... ... (E)	Graduate,	Feb. 1888
	Member,	Oct. 1894
Adamson, James Young, 3, Brown Street, Barrow-in-Furness ... (S)		Nov. 1896
Adamson, L. W., Eslington Villa, Jesmond Road, Newcastle-upon-Tyne... ... ... (E)		Oct. 1898
Aisbitt, Matthew Wheldon, 47, Mount Stuart Square, Cardiff ... (N A)		Oct. 1895
Alder, Sydney, 34, King Street, South Shields ... ... (C E & N A)		Nov. 1893
Alexander, Francis H., 42, Percy Park, Tynemouth ... .. (S)		May 1898
Allan, Jas. McNeal, The Poplars, Monkseaton, Northumberland... (E)		Dec. 1886

ELECTED.

Allan, George J., 20, Villa Place, Newcastle-upon-Tyne ... ... (E) Nov. 1898
Allardes, Wm., c/o Messrs. Harland & Wolff, Ltd., Engine Works, Belfast ... ... (E) Nov. 1884
Anderson, Joseph, Westfield Terrace, Wallsend-on-Tyne ... ... (E) Nov. 1884
Anderson, Thos. James, 2118, Strand, Galveston, Texas, United States of America ... ... (E SUR) Mar. 1898
Andrew, D., 33, Osborne Road, Jesmond, Newcastle-upon-Tyne ...(SUR) Jan. 1885
Andrews, Jas., Eton Villa, Cathcart, Glasgow ... ... (E) Nov. 1884
Angus, W. J., Messrs. Vickers, Sons & Maxim, Naval Construction Works, Barrow-in-Furness ... ... (E) Oct. 1892
Archbold, Joseph G., c/o Messrs. Blyth Dry Dock Co., Blyth ... (E) Jan. 1889
Arentz, H. S., c/o Messrs. R. & W. Hawthorn, Leslie, & Co., St. Peter's, Newcastle-upon-Tyne ... ... (E) April 1899
Armstrong, Joseph, 4, Salem Avenue, Sunderland ... ... (S) Nov. 1892
Armstrong, Robert B., c/o Messrs. Day, Summers & Co., Northam Ironworks, Southampton ... ... (E) Oct. 1887
Armstrong, Walter, 14, Elwin Terrace, Sunderland... ... ... (S) May 1899
Arnison, Geo., 36, Fawcett Street, Sunderland ... (N A & SUR) Nov. 1884
Atherton, William Henry, B.Sc., 113, Withington Road, Whalley Grange, Manchester ... ... (E) Oct. 1891
Atkinson, F. C., 37, Croydon Road, Newcastle-upon-Tyne... ... (E) Dec. 1892
Atkinson, George H., 3, Acclom Street, Hartlepool ... ... (E) Nov. 1898
Atkinson, John Joseph, 7, Swiss Road, Elm Park, Fairfield, Liverpool ... ... (E) Mar. 1891

B.

Bagnall, T. W., The Groves, Winlaton ... ...(F M) Nov. 1893
Bailey, Charles H., Tyne Engine Works, Newport, Mon. ... ... (E) Mar. 1896
Bailey, James, 3, South Avenue, Ryton-on-Tyne ... ... (E) Nov. 1884
Bailey, James N., 3, South Avenue, Ryton-on-Tyne ... ... (E) Nov. 1898
Bailey, James T., 82, The Avenue, Wallsend-on-Tyne ... ... (E) Feb. 1899
Baines, Geo. Henry, c/o Messrs. W. Gray & Co., Central Marine Engine Works, West Hartlepool ... ... (E) Oct. 1888
Baird, Alexander, 9, Delaval Road, Whitley, Northumberland ... (E) Oct. 1898
Baird, George, 25, Newcastle Road, North Shields ... ... (E) Oct. 1892
Baird, Robert, 13, Hylton Terrace, North Shields ... ... (E) Jan. 1890
Baker, E. F., H.M.S. "Magdala," Bombay, British India ... ... (E) { Graduate, Nov. 1892; Member, Feb. 1898 }
Barbour, John, South View House, South Shields... (E) { Graduate, Nov. 1890; Member, Oct. 1898 }
Barclay, James, Lloyd's Register of Shipping, Swansea ... ...(SUR) Nov. 1888
Barley, C. J., 87, Cambridge Street, London, S.W. (E) { Graduate, Feb. 1885; Member, Dec. 1886 }
Barnard, Robert, 11, Guildford Place, Heaton, Newcastle-upon-Tyne ... ... (E E) Mar. 1899
Barnett, James Rennie, Lilybank House, Johnstone, N.B. ... (S) Oct. 1889
Barrett, A., Staith House, West Hartlepool ... ... (E) May 1896
Barron, T. G., Hobourne, Elwick Road, West Hartlepool... ... (E) Oct. 1888
Batey, John Thomas, 25, Harrison Place, Newcastle-upon-Tyne ... (S) Nov. 1885
[illegible]. Jehangir Framji, 71, Apollo Street, Fort, Bombay ... (E) Dec. 1888

ELECTED.

Baxter, J., 26, Simonside Terrace, Heaton, Newcastle-upon-Tyne (E) Nov. 1884
Beadon, D. C., "Stoneham," Beech Grove Road, Newcastle-upon-Tyne... ... ... (E) Jan. 1885
Bell, Geo. Arthur, 48, Crown Street, Newcastle-upon-Tyne (E) { Graduate, Oct. 1890 / Member, Jan. 1894
Bell, Joshua Robson, 40, Hill Street, Jarrow-on-Tyne ... ... (S) Mar. 1899
Bell, William, Messrs. Cleland's Slipway Co., Willington Quay-on-Tyne ... . (E) Nov. 1888
Bell, William T., 175, Coatsworth Road, Gateshead-on-Tyne ... Nov. 1898
Berkley, A. B., Kent Villas, Jarrow-on-Tyne ... ... (E) Mar. 1887
Bigge, D. L. Selby, 27, Mosley Street, Newcastle-upon-Tyne ... (E E) Nov. 1894
Billetop, Torben Christian, 3, Guildford Place, Heaton, Newcastle-upon-Tyne ... ... (E) Nov. 1896
Bindesböll, S. C. W., Helsingors Lernskibs Cygerrie, Denmark ... (S) Nov. 1884
Black, J., 1, Church Street, West Hartlepool ... ... (E) Nov. 1888
Black, Wm., 1, Lovaine Place, Newcastle-upon-Tyne ... ... (E) Jan. 1885
Blackett, Walter, 19, Valletort Road, Stoke, Devonport ... ... (E) { Graduate, Nov. 1886 / Member, Nov. 1892
Blackie, Thomas Reid, Lloyd's Register of Shipping, 2, White Lion Court, Cornhill, London ... ... (SUR) Nov. 1890
Blenkinsop, John N., Marine Supt. Engineer, Great-Eastern Railway, Parkeston Quay ... ... (E) Oct. 1885
Blomberg, Carl A., 2262, North 19th Street, Philadelphia, Pa., United States of America ... ... (E) Oct. 1896
Blow, Charles, 104, Meldon Terrace, Heaton, Newcastle-upon-Tyne... ... ... (E) Nov. 1898
Blumer, Wm., Woodside, Sunderland... ... ... (S) Dec. 1886
Boddy, John, 96, Dock Street, Newport, Monmouthshire ... ... (E) Dec. 1888
Bodin, Lauritz M., 58, John Street, Sunderland ... ... (E & SUR) Dec. 1889
Bomphrey, Archibald W., 35, Storey Square, Barrow-in-Furness (S) Oct. 1898
Bone, W. J., 61, Linskill Terrace, North Shields ... ... (S) Dec. 1884
Bonnyman, James Smith, 64, Plasturton Avenue, Cardiff... ... (E) Nov. 1889
Boolds, Jas. H., Woodlands Road, Middlesbrough ... ... (S) Oct. 1886
Booth, Edward Spence, Box 5124, Boston, U.S. America ... (M S & N A) Oct. 1889
Booth, John William, Union Foundry, Rodley, near Leeds ... (E) April 1892
Borrowman, William Cameron, Wh.Sch., Newstead, Grange Road, West Hartlepool ... ... (E) Oct. 1898
Bosi, Guiseppe, Presso Rastelli, Sampierdarena, Genoa, Italy (E & NA) Jan. 1894
Bowden, John, Sheriff Mount, Gateshead-on-Tyne (E) { Graduate, Jan. 1894 / Member, Oct. 1898
Boyd, Arthur, Lloyd's Register of Shipping, Bute Docks, Cardiff (E SUR) May 1895
Boyd, Wm., North House, Long Benton, Newcastle-upon-Tyne ... (E) Nov. 1884
Boyt, John T., 302, Walnut Street, Philadelphia, Pa., U.S.A. ... (E) Nov. 1893
Bramwell, Balfour, c/o Messrs. Harland & Wolff, Engine Works, Belfast ... ... (E) { Graduate, Nov. 1886 / Member, Nov. 1887
Brankston, R. T., 36, Hawthorn Street, Newcastle-upon-Tyne ... (E) Nov. 1884
Brash, James, 18, Ashfield Terrace East, Newcastle-upon-Tyne ... (E E) Nov. 1897
Brew, George, c/o Messrs. Furness, Withy & Co., steamship owners, St. John's, New Brunswick ... ... (SUR & C E) May 1896
Brigham, Robert F., 5, Argyle Terrace, South Shields ... ... (E) Mar. 1897
Broadbent, Frank, c/o Messrs. J. H. Holmes & Co., Portland Road, Newcastle-upon-Tyne ... ... (E E) Nov. 1893

ELECTED.

Brockett, Charles, 35, Milton Road, West Hartlepool ... ... (E) Feb. 1899
Brotherstone, James, 2, Salisbury Street, Sunderland ... ... (E) Oct. 1895
Brown, Eugene, c/o Messrs. J. H. Holmes & Co., Portland Road, Newcastle-upon-Tyne ... ... (E E) Feb. 1886
Brown, Geo. Matthew, Birk Heads, Marley Hill, Swalwell, R.S.O. ... ... (E) { Graduate, April 1895; Member, Nov. 1897
Brown, James, c/o Sociedad Anonima, de los Astilleros del Nervion, Bilbao, Spain ... ... (E) Mar. 1891
Brown, Percy J., Salem Cottage, Sunderland ... ... (E) May 1899
Brown, Robson, 32, Salmon Street, South Shields ... ... (E) Nov. 1889
Brown, T. R., 27, Ripon Street, Sunderland ... ... (E) { Graduate, May 1885; Member, Oct. 1886
Brown, William, c/o Messrs. Siemens Brothers & Co., Woolwich... (E) April 1887
Browne, Sir B. C., Westacres, Benwell, Newcastle-upon-Tyne (C E) Jan. 1885
Buchanan, A., Michaelson Villa, Barrow-in-Furness ... ... (S) Nov. 1884
Buchanan, John H., Oswald Chambers, 5, Oswald Street, Glasgow(SUR) Oct. 1888
Buckland, H. B., Baltic Chambers, Quayside, Newcastle-upon-Tyne (E) Nov. 1885
Buckwell, George William, Board of Trade Surveyor's Offices, Custom House Arcade, Liverpool ... ...(SUR) Oct. 1896
Bull, John Catharinus, 29, Bexley Heath, Erith, Kent ... ... (E) Oct. 1892
Bulmer, Frederick Charles, 2, Graingerville North, Newcastle-upon-Tyne ... ... (E) { Graduate, May 1894; Member, Oct. 1895
Bulmer, John, 2, Graingerville North, Newcastle-upon-Tyne ... (E) Mar. 1886
Bulmer, John George, 34, Brighton Grove, Newcastle-upon-Tyne (E) May 1894
Burbridge, Alfred H., Backwell Rectory, Bristol ... (E) { Graduate, Oct. 1895; Member, Oct. 1898
Burnett, Norman, Watergate Buildings, Newcastle-upon-Tyne ... (E) Oct. 1891
Burney, Charles E., Norfolk House, York Road, West Hartlepool (SUR) Nov. 1898
Bush, Montague ... ... (EE) Nov. 1896
Bushell, Chas. A., 1, Benton Terrace, Newcastle-upon-Tyne (N A & SUR) Nov. 1893
Butterfield, George, 4, Kayll Road, Sunderland ... ... (S) Nov. 1884

C.

Cairns, C. W., 5, Roose Road, Barrow-in-Furness ... (E) { Graduate, Nov. 1894; Member, Dec. 1897
Cama, Nusserwanji Bomanji, Sleater Road, Tardeo, Bombay, British India ... ... (E) Dec. 1888
Cameron, Angus, c/o Sir James Laing, Bart., Deptford Yard, Sunderland ... ... (S) Nov. 1892
Campbell, J. Jennings, Bureau Veritas Register of Shipping, 155, Fenchurch Street, London, E.C. ... ... (E) Oct. 1888
Campbell, John M., 4, Winchester Terrace, Newcastle-upon-Tyne (N A) April 1895
Campbell, Thomas, c/o Messrs. Hills Dry Dock Co., Cardiff ... (S) Mar. 1894
Camps, H. E. J., 69, Grange Road West, Middlesbrough ... ... (S) Oct. 1894
Cannell, Frank, Messrs. H. Parry & Son, Lisbon ... ... (E & S) Nov. 1887
Carney, J. H., Glengariffe, Stow Park, Newport, Monmouth ... (E) Mar. 1897
Carstons, Samuel, Messrs. Burmeister & Wains, Maskin-og Skibsbyggeri, Copenhagen, Denmark... ... ... (S) Dec. 1887
Carter, Geo. J., Elswick Shipyard, Newcastle-upon-Tyne... ... (N A) Dec. 1897
Ts 10, Philpot Lane, London, E.C. ... ... (E) Nov. 1891

		ELECTED.
Ceuvel, John L., 86, Prins Hendrikkade, Amsterdam	(E)	Mar. 1886
Chapman, Harry Reynolds, Messrs. Clarke, Chapman & Co., Gateshead-on-Tyne	(E)	Mar. 1893
Charlton, Henry, 1, Millfield Terrace, Gateshead-on-Tyne ...	(E)	Nov. 1884
Charlton, R. B., Jun., Manors Railway Station Works, Newcastle-upon-Tyne	(E)	Nov. 1884
Charlton, T., 25, Lincoln Street, Gateshead-on-Tyne	(E)	Nov. 1884
Charlton, Thomas, The Cedars, Millhill, West Cowes, Isle of Wight	(E)	Nov. 1890
Chaston, Edward Catmore, 27, Larkspur Terrace, Newcastle-upon-Tyne	(E)	Oct. 1894
Cherry, Thos. Wm. Fry, c/o Messrs. The Greenock Foundry Co., Greenock	(E)	Oct. 1894
Chicken, Thomas, c/o Messrs. Newport Engineering and Ship Repairing Co., Newport, Monmouth	(E)	Oct. 1892
Chisholm, Alexander, 92, George Road, Wallsend-on-Tyne ...	(S)	Mar. 1893
Christie, C. J. D., Neptune Works, Walker-on-Tyne	(S)	Nov. 1884
Christie, J. D., Woodside, Tynemouth	(S)	Nov. 1884
Christie, Reginald, Woodside, Tynemouth	(E E)	
Churchill, James Dixon, 9, London Street, London, E.C.... ...	(E)	Oct. 1889
Clague, James Henry, Birkenhead Ironworks, Birkenhead ... ... (S)	Graduate, Member,	April 1891 May 1894
Clark, Charles, c/o Messrs. Robert Irvine & Co., Tower Chambers, West Hartlepool	(E)	Jan. 1897
Clark, Geo., Southwick Engine Works, Sunderland	(E)	Nov. 1884
Clark, George, Jun., Southwick Engine Works, Sunderland ...	(E)	Feb. 1888
Clark, Henry, Southwick Engine Works, Sunderland	(E)	Oct. 1887
Clarke, Harry, Lloyd's Register of Shipping, Leith	(E)	Mar. 1897
Clarke, Henry Trevisa, Deptford Shipyard, Deptford, Sunderland	(S)	Mar. 1892
Clarke, William Henry, The Hermitage, Gateshead-on-Tyne ...	(E)	Dec. 1896
Cleghorn, Alexander, Datcha, Scotstounhill, near Glasgow ...	(E)	Feb. 1897
Coates, Matthew C., 26, Denmark Street, Gateshead-on-Tyne ...	(E)	Nov. 1897
Cohn, William M., 2, Marine Terrace, North Shields	(S)	Nov. 1893
Coleby, James W., 42, Burns Terrace, Willington Quay-on-Tyne ... ... (E)	Graduate, Member,	Oct. 1891 Jan. 1894
Coletti, Silvio, 83, Park Road, Newcastle-upon-Tyne	(S)	Dec. 1895
Common, John B. A., Lloyd's Register of Shipping, 342, Argyle Street, Glasgow	(E)	April 1896
Conràdi, Carl, 8, Toldbodgaden, Christiana, Norway	(E)	Nov. 1884
Consiglio, Luigi, 8, Via Paterno, Palermo	(N A)	Nov. 1890
Cookson, John A., 26, Whitehall Road, Gateshead-on-Tyne ... ... (E)	Graduate, Member,	Dec. 1895 Nov. 1897
Cooper, Sidney ... ... (E)	Graduate, Member,	Nov. 1891 May 1895
Coote, Arthur, Messrs. R. & W. Hawthorn, Leslie, & Co., Hebburn-on-Tyne	(S)	Nov. 1884
Cornish, H. P., Lloyd's Register of Shipping, 28, Kattendyk, Ouest Quai, Antwerp	(E)	Oct. 1888
Couche, Henry Drew, c/o Messrs. Laird Bros., Birkenhead ...	(S)	Oct. 1891
Coull, Alex. B., Baltic Chambers, Newcastle-upon-Tyne	(C E)	Jan. 1898
Courtier-Dutton, W. T., British Corporation Registry of Shipping, 69, St. Vincent Street, Glasgow...	(S SUR)	April 1890
Cowan, Robert, 14, Osborne Avenue, South Shields	(E)	Dec. 1896

ELECTED.

Cowens, William Edward, c/o Messrs. John Abbot & Co., Gateshead-on-Tyne ... ... (E) Dec. 1889
Craggs, Ernest H., Messrs. R. Craggs & Sons, Middlesbrough ... (S) Oct. 1888
Craig, Robert, Pageland House, Grange Road, West Hartlepool ... (E) Nov. 1892
Crawford, Jas., Bureau Veritas Register of Shipping, 9, Custom House Court, Quayside, Newcastle-upon-Tyne ... (S SUR) Nov. 1886
Crawford, William, 60, Holly Avenue, Newcastle-upon-Tyne ... (E) Dec. 1896
Crofton, Charles, 17, Albany Terrace, Whitley, near Newcastle-upon-Tyne ... ... (E) Nov. 1895
Crookston, John, 72, Mark Lane, London, S.E. ... ... (E) Mar. 1896
Cruddas, W. D., M.P., Messrs. Sir W. G. Armstrong, Whitworth & Co., Ltd., Elswick, Newcastle-upon-Tyne ... ... (E) Dec. 1884
Cruickshank, Alexander, The Admiralty, Albany Buildings, 47, Victoria Street, London, S.W. ... ...(SUR) Mar. 1892
Cumming, William, May Cottage, Seafield, Broughty Ferry, N.B. (E) Mar. 1896
Cummins, W. R., 17, Victoria Street, Loughborough ... ... (E) Nov. 1884
Cunliffe, Tom Arthur, 26, Ormonde Street, Chester Road, Sunderland ... ... (E) Feb. 1897

D.

Dale, John, 26, Whitehall Terrace, Hylton Road, Sunderland ... (E) Mar. 1897
Dalrymple, Wm., Myrtle Cottage, nr. Cleadon, Sunderland ... (E) Dec. 1886
Dalrymple, William, Jun., 8, Amberley Terrace, Sunderland ... (E) Dec. 1895
Daniel, Alfred John, Board of Trade Surveyors' Office, Cardiff ... (S) Nov. 1893
Darling, W. J., Lloyd's Register of Shipping, Dock Chambers, Barry ... ... (S) April 1887
Darney, John, c/o Messrs. Short Bros., Pallion, Sunderland ... (S) Nov. 1884
Davis, Thos. Wilfrid, Birkenfeld, Bromley, Kent ... (E) {Graduate, Jan. 1891 / Member, Mar. 1894}
Dawson, Herbert, 7, Cuthbert's Terrace, Gateshead-on-Tyne ... (E E) Nov. 1897
Deighton, William, Messrs. Deighton's Patent Flue Co., Vulcan Works, Pepper Road, Leeds ... ... (E) Nov. 1897
Denny, Archibald, c/o Messrs. Denny & Co., Dumbarton ... ... (S) Dec. 1891
De Rusett, Edwin W., Warden House, Percy Park Road, Tynemouth ... ... (S) Nov. 1890
Detchon, John, 115, Bell Terrace, Newcastle-upon-Tyne ... ... (E) Feb. 1899
Dick, F. W., c/o Messrs. Palmer's Shipbuilding Co., Jarrow-on-Tyne... ... ... (I & S M) Oct. 1891
Dickie, James, 428, Mississippi Street, Potrero, San Francisco, California, U.S.A.... ... ... (S) Mar. 1894
Dickinson, F. T., 23, Park Place W., Sunderland ... (E) {Graduate, May 1885 / Member, Oct. 1886}
Dickinson, James, The Cloisters, Sunderland ... ... (E) Nov. 1884
Dickinson, John, Park House, Sunderland ... ... (E) Nov. 1884
Dickinson, W., The Club, Sunderland ... ... (E) Nov. 1884
Dietze, F. G., Messrs. The Hamburg South American Steam Ship Company, Hamburg ... ... (E) Nov. 1893
Dixon, James, c/o Messrs. Ropner & Sons, Shipbuilders, Stockton-on-Tees ... ... (E) Dec. 1893
Dixon, John Rochester, 79, Osborne Road, Newcastle-upon-Tyne ... ... (E) {Graduate, Oct. 1887 / Member, Feb. 1893}

ELECTED.

Dixon, Sir Raylton, Cleveland Shipyard, Middlesbrough ... ... (S) Feb. 1888
Dobson, Henry James, c/o Messrs. William Dobson & Co., Newcastle-upon-Tyne ... ... (S) { Graduate, Oct. 1891; Member, Feb. 1898
Dobson, John T., 3, East Street, Sunderland... ... ... (S) May 1899
Dobson, William, Shipbuilder, Walker-on-Tyne ... ... (S) Nov. 1888
Donald, James, 58, General Gordon Terrace, Sunderland ... ... (S) Nov. 1884
Donkin, George, St. Andrew's Engine Works, Newcastle-upon-Tyne (E) Oct. 1892
Donovan, J. W., 5, Ash Place, Newcastle Road, Sunderland ... (E) April 1885
Dos Santos, Apolinaris J., Rio Grande-do-Sul, Brazil ... (SUR) Nov. 1891
Douglas, John F., c/o Messrs. Ramage & Ferguson, Leith... ... (E) Jan. 1888
Dove, Herbert J., 25, Ashfield Terrace W., Newcastle-upon-Tyne (E) Nov. 1896
Downing, Nicholas, Glenbrooke, Victoria Avenue, Norton Road, Stockton-on-Tees ... ... (I F) Oct. 1894
Dowsen, Chas., 21, Croft Terrace, Jarrow-on-Tyne... ... ... (E) Dec. 1885
Doxford, Albert Ernest, M.A., 1, Grange Crescent, Sunderland... ... ... (E) { Graduate, Oct. 1890; Member, Nov. 1893
Doxford, Charles D., Bainbridge Holme, Tunstall Road, Sunderland (S) Nov. 1884
Doxford, Robert P., Pallion Engine Works, Sunderland ... ... (E) Nov. 1884
Doxford, W. Theodore, M.P., Pallion Shipyard, Sunderland ... (S) Nov. 1884
Duckitt, Jno., Leazes Gate Villa, Newcastle-upon-Tyne ... ... (E) Nov. 1884
Duckitt, John Brentnall, 20, George Lane, Woodley, *via* Stockport, Cheshire... ... ... (E E) { Graduate, Oct. 1888; Member, April 1895
Duckitt, Talbot, 12, Leopold Street, Loughborough (E E) { Graduate, Oct. 1891; Member, Oct. 1898
Dudgeon, F. S., 30, Great St. Helens, London, E.C. ... ... (E) Feb. 1885
Dugdale, William H., Green Bank, Jarrow-on-Tyne ... ... (S) Mar. 1894
Duguid, Robert, c/o Messrs. Harland & Wolff, Drawing Office Department, Belfast ... ... (S) Oct. 1892
Duncan, George Thos., c/o Messrs. Tangyes Limited, 3, St. Nicholas' Buildings, Newcastle-upon-Tyne ... ... (E) Nov. 1894
Dunlop, John, 145, Langlands Road, Govan, Glasgow ... ... (S) Mar. 1898
Dunlop, William, c/o Messrs. Odero fu Aless°., Sestri-Ponente, Italy (E) Mar. 1888
Dykes, George, Lloyd's Register of Shipping, Steinhoeft 3, Hamburg ... ... (S) Jan. 1893
Dykes, James, 82, Park Road, Newcastle-upon-Tyne ... ... (E) May 1885
Dykes, John, Lloyd's Register of Shipping, Oriel Chambers, Liverpool ... ...(SUR) Oct. 1889

E.

Eason, Thos., 22, Woodbine Road, Gosforth, Newcastle-upon-Tyne (E) April 1899
Edminson, Frank A., Ormidale, Otterburn Villas, Newcastle-upon-Tyne ... ... (S) { Graduate, Nov. 1893; Member, Nov. 1897
Edmiston, Jas. B., Ivy Cottage, Highfield Road, Walton, Liverpool (E) Nov. 1886
Edwards, Guy W., 89, Holly Avenue, Newcastle-upon-Tyne ... (E) Mar. 1897
Edwards, James Harry, Jun., High Docks, South Shields... ... (S) Mar. 1893
Eeles, Robert, Queen Street, Newcastle-upon-Tyne ... ... (E) April 1889
Eidman, William, 1, Gay Street, Penarth ... ... (E) Nov. 1897
Elder, Edward, c/o Messrs. J. & G. Thomson, Clydebank, Glasgow ... ... (S) { Graduate, Nov. 1890; Member, Oct. 1892
Elliott, William D., Hessle, Hull ... ... (E) Nov. 1894

ELECTED.

Ellis, Robert Elwood, Messrs. Cumming & Ellis, Inverkeithing, Fife ... ... (S) Feb. 1891
English, Thos. (Lieut.-Col.), Hawley, near Dartford, Kent ... (E) Oct. 1890
Eshelby, William, 13, Brankingham Terrace, Norton Road, Stockton-on-Tees ... ... (E) Feb. 1888
Evans, Lewis, c/o Ralph Carr, Esq., Maritime Buildings, King Street, Newcastle-upon-Tyne ... ...(SUR) Dec. 1890
Evans, William, Superintendent Engineer, Rosedene, Whitchurch, Cardiff ... ... (E) Nov. 1889
Evans, William T., c/o Messrs. John Cory & Sons, Mount Stuart Square, Cardiff ... ... (E) Mar. 1896

F.

Fairbairn, James, 54, Amberly Street, Sunderland... (E) { Graduate, May 1885; Member, April 1895 }
Farina, A. J., 63, Quayside, Newcastle-upon-Tyne ... ... (E) Nov. 1884
Farquharson, Geo. James, c/o Messrs. Elder, Dempster & Co., Linsenhof, Hamburg ... ... (E) April 1899
Fenwick, James, B.Sc., C.E., 19, Bridge Street, Sydney, New South Wales ... ... (E) Oct. 1892
Fernandes, Charles B. L., c/o Messrs. Sir W. G. Armstrong, Whitworth & Co., Ltd., Elswick Ordnance Works, Newcastle-upon-Tyne ... ... (E E) Jan. 1899
Ferrier, Robert M., B.Sc., Durham College of Science, Barras Bridge, Newcastle-upon-Tyne ... ... (E) Nov. 1892
Fettes, James, c/o Messrs. R. E. Mudie & Sons, Marine Buildings East, Dock Street, Dundee ... ... May 1899
Field, Arthur M. C., 34, Springfield Place, Leeds ... ... (E E) Jan. 1898
Finch, Herbert K., Colliery Agent, Tower House, Preston, Lancashire ... ... (E) { Graduate, Dec. 1888; Member, Nov. 1894 }
Fish, Thomas Wilson, Lloyd's Register of Shipping, Calcutta, British India ... ...(SUR) May 1892
Fleming, Charles Edward, 71, Elswick Road, Newcastle-upon-Tyne (E) Nov. 1884
Fletcher, Robert, Walker Forge, Walker-on-Tyne ... ...(F M) Dec. 1886
Flohr, Justus, Director der Stettiner Maschinenbau-Actien-Gesellschaft "Vulcan," Rantstrasse 9, Stettin ... ... (E) Oct. 1886
Foley, Wm. C. le B., Box 537, Newport News, Virginia, U.S.A. ... ... (S) { Graduate, Nov. 1887; Member, Oct. 1892 }
Ford, David, c/o Messrs. J. Boyd & Co., Shanghai, China ... ... (E) May 1891
Ford, John McLaren, 70, Mount Pleasant, Barrow-in-Furness ... (S) Nov. 1896
Forster, Alfred Lindsay, 23, Noble Terrace, Gateshead (E) { Graduate, Nov. 1891; Member, Oct. 1895 }
Forster, Edgar S., Grange Villas, Lawford Gardens, Rugby, Warwickshire... ... ... (E) { Graduate, Jan. 1894; Member, Oct. 1898 }
Forster, William, c/o Messrs. Dixon, Robson & Co., 2, Collingwood Street, Newcastle-upon-Tyne ... ... (E) Mar. 1890
Foster, Henry, c/o Messrs. Galloway & Co., Knott Mills Ironworks, Manchester ... ... (E) April 1885
Foster, L. P., Trevillis, Liskeard, Cornwall ... ... (E) { Graduate, Nov. 1893; Member, Oct. 1898 }
Fothergill, J. R., Dock Office, West Hartlepool ... ... (C E) Mar. 1886

ELECTED.

Fownes, Henry, Goldspink Hall, Newcastle-upon-Tyne ... ... (F M) Nov. 1884
Fox, Samson, Messrs. The Leeds Forge Co., Leeds (*Life Member*) (E) Dec. 1887
Fox, William, 9, Winfield Terrace, Chester Road, Manchester ... (E) April 1895
Franki, J. P., c/o Messrs. Morts Dry Dock and Engineering Co., Sydney, N.S.W., Australia ... ... (E) Jan. 1886
Fraser, John Holt, 48, Balliol Road, Bootle, Liverpool (E) { Graduate, Oct. 1895 / Member, Jan. 1898 }
Fraser, Thomas S., 1, The Hollies, Armley, Leeds ... ... (E E) Jan. 1894
Furneaux, J. B., Victoria Engine Works, Gateshead-on-Tyne ... (E) Nov. 1885
Furse, Fred., c/o Messrs. Hawthorn, Guppy & Co., Engineers, Naples... ... ... (S) April 1887

G.

Gaine, Roger L., 8, Moor House, Hartlepool ... (E) { Graduate, Dec. 1887 / Member, Oct. 1894 }
Gannaway, H. G., 12, Croft Terrace, Jarrow-on-Tyne ... ... (S) Nov. 1884
Garelli, Fabio, *via* Settembre, Sestro Ponente, Italy ... ... (S) Oct. 1896
Garmey, John, 27, Queen's Terrace, Jesmond, Newcastle-upon-Tyne ... ... (E) Dec. 1898
Garthwaite, John R., c/o Messrs. R. Ropner & Sons, Stockton-on-Tees (S) May 1889
Gates, George, 8, Scafell Terrace, York Road, West Hartlepool ... (E) Jan. 1899
Gayner, Robt. H., Jun., Beech Holm, Sunderland ... (E) { Graduate, Mar. 1886 / Member, Oct. 1888 }
Gearing, Ernest George, Penshurst, Clarence Drive, Harrogate ... (E) Dec. 1892
Geddes, Christopher, 2A, Drury Lane, Water Street, Liverpool ... (E) Oct. 1888
Gibson, H., 162, Roker Avenue, Monkwearmouth, Sunderland ... (S) Nov. 1884
Gibson, J. Hamilton, c/o Messrs. Laird Bros., Birkenhead (E) { Graduate, April 1891 / Member, Oct. 1894 }
Gibson, Thomas, 162, Roker Avenue, Sunderland ... (E) { Graduate, Nov. 1893 / Member, Dec. 1897 }
Gibson, W. H., 37, Tatham Street, Sunderland ... ... (E) Nov. 1884
Golledge, William, Royal Agricultural Hall, Islington, London ... ... (E E) { Graduate, Nov. 1891 / Member, Nov. 1896 }
Good, Farrant, c/o Messrs. Bute Dry Dock Co., Ltd., Roath Basin, Cardiff ... ... (E) Mar. 1896
Gordon, William James, c/o Messrs. Vickers, Sons & Maxim, Naval Construction Works, Barrow-in-Furness ... ... (E) Oct. 1887
Gordon, William Leslie, Invermark, Broughty Ferry, N.B. ... (E) April 1893
Graham, James Thos., 126, Westmorland Road, Newcastle-upon-Tyne ... ... (E) Nov. 1897
Graham, William, c/o Messrs. Osbourne, Graham & Co., Hylton, near Sunderland ... ... (S) Nov. 1884
Graham, William, West House, Tynemouth ... ... (S) Oct. 1891
Graham, William, 30, Hill Street, Jarrow-on-Tyne ... ... (S) April 1893
Graham, William, Rockcliffe, Redbrink Crescent, Barry Island ... (E) Nov. 1894
Gravell, John, Bureau Veritas Register of Shipping, 155, Fenchurch Street, London, E.C. ... ... (N A SUR) Nov. 1884
Gray, A., 1, South Parade, Newcastle-upon-Tyne ... ... (E) Nov. 1888
Gray, George, 3, Cedars Crescent, Ryhope Road, Sunderland ... (E) Feb. 1888
Gray, Harry, Dominion House, 110, Fenchurch Street, London, E.C. ... ... (E) Dec. 1885

ELECTED.

Green, W. G., c/o Messrs. Chantiers Naval de Nicolaieff, a Bouffioulx, Hainaut, Belgium ... ... (E) Nov. 1884
Greenhow, John, 1, Bright Street, Middlesbrough ... ... (S) Oct. 1894
Greig, David William, Messrs. Lymington Shipbuilding Co., Lymington, Hants. ... ... (E) Mar. 1891
Grey, Charles, 17, Lovaine Crescent, Newcastle-upon-Tyne ... (E) Feb. 1898
Griffith, Edwin ... ... (E) Nov. 1897
Grimes, Thomas Benjamin, 39, Vespasian Avenue, South Shields... (E) Mar. 1890
Gross, Felix, 47, Queen's Terrace, Newcastle-upon-Tyne ... (I & S M) Feb. 1893
Gulston, A., Clayton Park Lodge, Jesmond, Newcastle-upon-Tyne (E) Dec. 1888
Gunn, Sir John, Chairman, Messrs. Mount Stuart Dry Docks Co., Cardiff (*Life Member*) ... ... June 1896

H.

Hall, Edward, 68, Grange Road West, Jarrow-on-Tyne ... ... (S) Nov. 1885
Hall, J. Percy, Carville, Lawrie Park Road, Sydenham, London, S.E. (E) Oct. 1885
Hallowell, William, 75, Chillingham Road, Heaton, Newcastle-upon-Tyne ... ... (E) Feb. 1899
Hamilton, Robert C., The College, Durham... ... (E) { Graduate, Dec. 1892 / Member, Oct. 1895 }
Hammar, Hugo G., Lindholmens, Verkstads Alstieholag, Göteberg, Sweden ... ... (S) Nov. 1890
Haramüshi, M., Jun., 156, Hommachi Köchi, Tosa, Japan ... (N A) Nov. 1897
Harbottle, John, 63, Malvern Street, Newcastle-upon-Tyne ... (E) Oct. 1896
Harkness, Richard, Grange Road, West Hartlepool ... (S SUR) Nov. 1884
Harlow, F., 8, Benton Terrace, Newcastle-upon-Tyne ... ... (E) Nov. 1884
Harman, Bruce, Messrs. The Linde British Refrigerating Co., 35, Queen Victoria Street, London, E.C. ... ... (E) Oct. 1886
Harper, J. H., 1, Beaumont Street, North Shields ... ... (E) Jan. 1885
Harris, Anthony, 73, Queen Victoria Street, London, E.C. ... (E) Mar. 1892
Harrison, Alfred, Scotia Engine Works, Sunderland (*Life Member*) (E) Oct. 1889
Harrold, Alexander, 26, Park Road, Newcastle-upon-Tyne ... (E) Nov. 1884
Harrold, F., 140, Cardigan Terrace, Heaton, Newcastle-upon-Tyne (E) Nov. 1888
Harroway, George Mitchell, 8, Cambridge Terrace, Borough Road East, Middlesbrough ... ... (S) Jan. 1896
Hartley, W. A., c/o Messrs. Charles Cammell & Co., Sheffield ... (E) Jan. 1898
Hartness, Charles, 2, Summerhill East, Sunderland ... ... (E) Dec. 1898
Harvey, Herbert Buchanan, Roker Villa, Heaton, Newcastle-upon-Tyne ... ... (E) { Graduate, Jan. 1896 / Member, Oct. 1898 }
Harvey, James Andrew, 3, St. Nicholas' Buildings, Newcastle-upon-Tyne ... ... (E) Feb. 1899
Harvey, John W. J., 1, Richmond Villa, Chertsey Road, Redland, Bristol ... ... (E) Feb. 1889
Haussman, B., 39A, Gracechurch Street, London, E.C. ... ... (E) Feb. 1899
Headlam, Robert, New Park Terrace, Hartburn Lane, Stockton-on-Tees ... ... (E) Nov. 1886
Heaviside, Arthur West, 7, Grafton Road, Whitley, near Newcastle-upon-Tyne ... ... (E E) Oct. 1896
Heck, John H., Lloyd's Register of Shipping, 3, St. Nicholas' Buildings, Newcastle-upon-Tyne ... ... (S SUR) Nov. 1885
Hemphill, Henry ... (E) April 1897

ELECTED

Henderson, Alex., c/o Messrs. Empreza, Nacional, De. Nav. D'Vapor, Lisbon ... ... (E) April 1893
Henderson, A. M., 3, Greatham Terrace, West Hartlepool ... (E) Nov. 1890
Henderson, George, 54, Westmorland Road, Newcastle-upon-Tyne (E) Nov. 1884
Henderson, John, 1, Broadhurst Street, St. Michael's, Liverpool ... (N A) June 1896
Henry, William P., Cragside, St. Aidan's Road, South Shields ... (E) April 1897
Henshall, Samuel, 7, Lennox Street, Middlesbrough (S) { Graduate, May 1885; Member, Jan. 1894 }
Hepburn, Alfred, Northumberland Forge, Wallsend-on-Tyne ... (F M) Dec. 1890
Hepple, William, Slipway, Wapping Street, South Shields... (E & S) Oct. 1885
Hepple, William Thos., Messrs. Hepple & Co., Engineers, Wapping Street, South Shields ... ... (E) Dec. 1893
Hesketh, Thomas, Bryn Tirion, Richmond Road, Cardiff ... ...(SUR) April 1896
Higgins, C. F., c/o Messrs. T. Richardson & Sons, Ltd., Hartlepool (E E) Feb. 1898
Hildrey, A. J., 11, Newcastle Road, Sunderland ... ... (S) Nov. 1884
Hill, Maxwell, 7, The Side, Newcastle-upon-Tyne ... ... (N A) Nov. 1884
Hinchliffe, Robert, 25, Hawthorn Street, Newcastle-upon-Tyne ... ... (S) { Graduate, Nov. 1893; Member, Oct. 1898 }
Hindson, William Forster, 19, Ravensworth Terrace, Gateshead-on-Tyne ... ... (E) { Graduate, Nov. 1891; Member, Nov. 1892 }
Hirst, Richard, 25, Brougham Terrace, West Hartlepool ... (E SUR) Nov. 1885
Hobbs, Arthur, c/o Messrs. Ferranti, Ltd., Hollingwood, Oldham ... ... (E) { Graduate, Nov. 1897; Member, Oct. 1898 }
Hodge, Rowland F. W., c/o Messrs. The Northumberland Shipbuilding Co., Limited, Northumberland Shipyard, Howdon-on-Tyne ... ... (S) Dec. 1890
Hodgson, Rich., Bowness, Gordon Street, Workington ... ... (S) Dec. 1896
Hogg, Archibald, Netherleigh, Beach Avenue, Whitley, Northumberland ... ... (S) Jan. 1897
Hogg, James, 8, Lovaine Terrace, North Shields ... ... (B F) Nov. 1889
Hök, Wilhelm, Deptford Shipyard, Sunderland ... ... (S) Oct. 1886
Holgate, Charles H., School Close Works, Leeds ... ... (E) Feb. 1895
Hollis, Henry William, Fairfield, Darlington ... ... (I M) Oct. 1891
Holmes, John H., Portland Road, Newcastle-upon-Tyne ... ... (E E) Jan. 1888
Homji, A. C. N., c/o Messrs. Lakhmidas Khimji S. & W. Co., Limited, Fergusson Road, Bombay, India ... ... (E) Nov. 1884
Hooper, Ernest, 24, Whitehall Terrace, Hylton Road, Sunderland (E) Nov. 1885
Hougland, Even, Lloyd's Surveyor, Bergen, Norway ... ... (E) Dec. 1896
Houston, John, 32, Randolph Street, Sunderland ... ... (E) Nov. 1894
Hughes, Thos. Charles, 3, Summerhill Street, Newcastle-upon-Tyne ... ... (E) { Graduate, Nov. 1893; Member, Nov. 1897 }
Hunter, George B., Messrs. C. S. Swan, Hunter & Co., Wallsend-on-Tyne ... ... (S) Nov. 1884
Hunter, J. W., 10, Princess Street, Stockton Road, Sunderland ... (E) May 1885
Hunter, Summers, c/o Messrs. N.E. Marine Engineering Co., Northumberland Engine Works, Wallsend-on-Tyne ... ... (E) Nov. 1885
Hutchinson, C. W., 6, Park Parade, Westmorland Road, Newcastle-upon-Tyne ... ... (E) Nov. 1884
Hutchinson, Wesley, B.A., 6, Park Parade, Westmorland Road, Newcastle-upon-Tyne ... ... (E) Oct. 1891
Hutchison, J., Board of Trade Offices, Middlesbrough ... ...(SUR) Dec. 1891
Hutchison, Thomas Allan ... ... (S) Nov. 1891

I.

ELECTED.

Inglis, John, c/o Messrs. Hawthorn & Co., Leith ... ... (S) April 1887
Inglis, John, Pointhouse Shipyard, Partick, Glasgow ... (E & S) Oct. 1886
Irwin, J. H., Sunderland Engine Works, South Docks, Sunderland (E) Nov. 1884
Ives, Bernard, c/o Messrs. The Northumberland Shipbuilding Co., Northumberland Shipyard, Howdon-on-Tyne ... ... (S) Feb. 1898

J

Jack, Charles Kellie, c/o Messrs. Ropner & Sons, Shipbuilders, Stockton-on-Tees ... ... (S) Nov. 1897
Jack, William C., c/o Messrs. The Hong Kong & Whampoa Dock Co., Limited, Hong Kong, China ... ... (E) Nov. 1894
Jackson, Albert S., 3, Mount Stuart Square, Cardiff ... ... (E) Mar. 1896
Jackson, William S., Messrs. Gourlay Bros. & Co., Camperdown Shipyard, Dundee... ... ... (S) April 1891
James, M. C., 6, Park Terrace, Gateshead-on-Tyne ... ... (S) Nov. 1884
Jennings, Frederick, 30, First Avenue, Heaton, Newcastle-upon-Tyne ... ... (E) Feb. 1898
Jewitt, Charles Wm., West Park View, Stanhope Road, South Shields ... ... (E & S) Nov. 1897
Jobling, W. J., 1, Akenside Hill, Newcastle-upon-Tyne ... (E & S O) Nov. 1884
Johson, H. G., Exchange Buildings, West Hartlepool ... ...(SUR) June 1896
Johson, Robert, Jun., Clifton Avenue, West Hartlepool ... ... (S) Feb. 1898
Johnson, Alexander, Bank Chambers, Sandhill, Newcastle-upon-Tyne ... ... (E) Feb. 1893
Johnson, Johan, 7, Vestra Hamngaten, Gothenburg, Sweden ... (S) May 1885
Johnson, T. Allan, Dry Docks, Passage West, Cork ... ... (S) Nov. 1884
Johnstone, William, Lloyd's Register of Shipping, 58, John Street, Sunderland ... ...(SUR) Nov. 1884
Joicey, Jacob G., Forth Banks West Factory, Newcastle-upon-Tyne (E) Jan. 1889
Jones, George, c/o Messrs. W. Gray & Co., Shipyard, West Hartlepool ... ... (S) Oct. 1888

K.

Kaneda, Wasaburo, c/o Messrs. J. & G. Thompson, Clydebank, Glasgow ... ... (SUR) Nov. 1897
Keene, H. R., Lloyd's Register of Shipping, Ouest Quai, 28, Katendyk, Antwerp ... ... (E) { Graduate, May 1885; Member, April 1887 }
Kendall, Stonard O., Lloyd's Register of Shipping, 2, White Lion Court, Cornhill, London, E.C. ... ...(SUR) Mar. 1891
Kerfoot, James, 45, Rue de Grand Chila, Zurenberg, Antwerp ... (E) Oct. 1892
King, John, 16, Lefroy Street, Newcastle-upon-Tyne (S) { Graduate, Dec. 1890; Member, Oct. 1892 }
Kirby, John Storne, 19, Lily Avenue, Jesmond, Newcastle-upon-Tyne... ... ... (E) Mar. 1899
Kirkaldy, John, 21, Ground Floor, Leadenhall House, 101, Leadenhall Street, London, E.C. ... ... (E) Nov. 1885
[illegible] J. F., Clifton Avenue, West Hartlepool ... ... (E) Nov. 1890
[illegible]man M. W., 26, Sandhill, Newcastle-upon-Tyne ... (E) Nov. 1898

L.

		ELECTED.
Lace, Basil T., Lyncombe, Rise, Bath	(E)	Graduate, Nov. 1895 Member, Nov. 1897
Laing, Andrew, c/o Messrs. Wallsend Slipway and Engineering Co., Wallsend-on-Tyne	(E)	Oct. 1892
Laing, Arthur, Deptford Shipyard, Sunderland	(S)	Nov. 1884
Laing, Hugh, Deptford Shipyard, Sunderland	(N A)	April 1897
Laing, John, c/o Messrs. R. & W. Hawthorn, Leslie, & Co., St. Peter's, Newcastle-upon-Tyne	(E)	Nov. 1884
Landreth, Cowen, 34, Simonside Terrace, Newcastle-upon-Tyne ...	(E)	Mar. 1896
Lang, William Veysey, Messrs. Allsop & Co., Shipbuilders and Engineers, Preston, Lancashire...	(E)	Nov. 1897
Larkin, James, Tyne View, East Jarrow-on-Tyne	(E)	Nov. 1884
Leathard, Thomas Surtees, 9, Otto Terrace, Sunderland	(SUR)	April 1899
Lewins, Frank, Rosehill, Willington Quay-on-Tyne	(E)	Dec. 1895
Lewis, R. A., Newburn Steel Works, Newburn-on-Tyne	(E)	Nov. 1884
Liddell, J., c/o Messrs. Denny & Co., Engine Works, Dumbarton	(E)	Nov. 1884
Lie, Gotfred, Det Bergenske Dampskibsselskab, Bergen	(E)	Jan. 1895
Lindfors, Hugo, Surveyor to Lloyd's Register of Shipping, 16, Alexandersgatan, Helsingfors, Finland	(SUR)	May 1889
Lineham, Wilfrid J., Jesmond, Leyland Road, Lee, London, S.E.	(E)	Oct. 1890
Littleboy, Chas. Wm., The Woodlands, Saltburn-by-the-Sea ...	(S)	Oct. 1887
Littledale, John W. E., 74, Warrington Road, Newcastle-upon-Tyne	(E)	May 1896
Livingston, Thos. L., Dunedin House, Jarrow-on-Tyne	(S)	Nov. 1884
Lohmeyer, H., 53, Crown Street, Newcastle-upon-Tyne	(E)	Nov. 1884
Long, A. E., 124, Albert Road, Jarrow-on-Tyne	(S)	Nov. 1884
Lowdon, David, Messrs. The Barry Graving Dock and Engineering Co., Limited, Barry Dock, near Cardiff	(E)	May 1894
Lowdon, John, Messrs. The Barry Graving Dock and Engineering Co., Limited, Barry Dock, near Cardiff	(E)	Dec. 1891
Lumley, William, 2, Claremont, Gateshead-on-Tyne...	(E)	Graduate, June 1896 Member, Oct. 1898

M.

MacColl, Hector, Bloomfield, Belfast	(E)	Dec. 1890
MacColl, Hugo, Wreath Quay Engineering Works, Sunderland ...	(E)	Nov. 1896
Maccoy, John, 55, Larkspur Terrace, Newcastle-upon-Tyne ...	(E)	Feb. 1886
Macdonald, Charles, 4, St. Nicholas' Buildings, Newcastle-upon-Tyne	(SUR)	Feb. 1898
MacDonald, David R., c/o Messrs. Sir W. G. Armstrong, Whitworth & Co., Ltd., Walker Shipyard, Newcastle-upon-Tyne	(S)	Nov. 1891
Mace, W., 253, Albert Road, Jarrow-on-Tyne	(E)	Jan. 1886
MacHaffie, John, 635, Terrace Place, Schenectady, New York, U.S.A.	(E)	Dec. 1885
Macgregor, W. L., 22, Cecil Street, North Shields	(SUR)	Mar. 1899
Mackay, William, 15, Camperdown Road, Scotitown, Renfrewshire	(S)	Mar. 1892
Mail, M., Jun., 8, Ashbrook Terrace, Sunderland	(E)	Nov. 1897
Mair, James, Wh.Sc., 1, Bedford Terrace, North Shields	(E)	Oct. 1894
Manaira, Guiseppe, 4, Salita S Gerslamo, Genoa, Italy ...	(E & N A)	Nov. 1893

ELECTED

Marr, James, c/o Messrs. J. L. Thompson & Sons, North Sands Shipyard, Sunderland ... ... (S) Nov. 1884
Marshall, F. C., Aikenside Lodge, Newcastle-upon-Tyne ... ... (E) Nov. 1884
Marshall, Frank T., Messrs. R. & W. Hawthorn, Leslie & Co., St. Peter's, Newcastle-upon-Tyne ... ... (E) { Graduate, Jan. 1885; Member, Oct. 1888 }
Marshall, R. J., 51, Larkspur Terrace, Jesmond, Newcastle-upon-Tyne... ... ... (E) Mar. 1887
Maslen, Frank E., 14, Belsize Park Gardens, Hampstead, London, N.W. ... ... (E) { Graduate, Nov. 1891; Member, May 1898 }
Mason, George F., Lloyds' Bank Buildings, Mount Stuart Square, Cardiff ... ... (E) Oct. 1895
Mather, Charles, 2, St. George's Terrace, Newcastle-upon-Tyne... (SUR) Oct. 1888
Mather, Clifford Basil, Lesbury House, Lesbury, R.S.O. (N A) { Graduate, Oct. 1892; Member, Oct. 1898 }
Mather, Thomas Brewer, 13, Park Avenue, Whitley, near Newcastle-upon-Tyne ... ... (C E) Nov. 1898
Matheson, William, c/o Messrs. R. & W. Hawthorn, Leslie & Co., Hebburn-on-Tyne... ... ... (S) Dec. 1889
Mathieson, Donald, 30, Jackson Street, Sunderland ... ... (E) Nov. 1898
Matsuda, Mantaro, 7, Warrington Road, Newcastle-upon-Tyne ... (E) Jan. 1898
Matthews, A., c/o Messrs. Blyth Shipbuilding Co., Blyth... ... (S) Nov. 1884
Matthews, Jas., c/o Messrs. R. & W. Hawthorn, Leslie & Co., Forth Banks, Newcastle-upon-Tyne ... ... (E) Oct. 1886
Maxwell, William Ward, Messrs. H. Charlton & Co., Engineers, Gateshead-on-Tyne ... ... (E) Dec. 1896
McBride, William, Beaconsfield Square, Hartlepool ... ... (E) Dec. 1894
McGlashan, Arch., Beechcroft, Clifton Avenue, West Hartlepool (S) Nov. 1885
McIlvenna, J. G., c/o Messrs. The Tyne Pontoons and Dry Docks Co., Wallsend-on-Tyne ... ... (S) Nov. 1884
McKechnie, James, Messrs. Vickers, Sons & Maxim, Naval Construction Works, Barrow-in-Furness ... ... (E) April 1896
McKenna, Francis, c/o Messrs. E. F. Wailes & Co., 4, St. Nicholas' Buildings, Newcastle-upon-Tyne ... (E) { Graduate, Dec. 1890; Member, Dec. 1896 }
McLaren, Robert M., Flinton Hill, Sunderland ... ... (S) Nov. 1893
McLaren, William, 16, Rock Park, Rock Ferry, Cheshire ... ... (E) Oct. 1894
McLean, John H. K., Abey House, Plotina Terrace, South Shields (S) Mar. 1897
McNeil, Thomas Young, Ship Drawing Office, Messrs. The Clydebank Engineering and Shipbuilding Co., Glasgow ... ... (S) Oct. 1895
Meagher, H. L., Messrs. Sir W. G. Armstrong, Whitworth & Co., Ltd., Elswick Ordnance Works, Newcastle-upon-Tyne ... (E) Dec. 1896
Mechan, Henry, c/o Messrs. Mechan & Sons, Cranstonhill, Glasgow (E) May 1898
Meldrum, Michael, Humbledon View, Sunderland ... ... (E) Dec. 1893
Mellanby, Alex. Lawson, B.Sc., Fernleigh, Grange Road, West Hartlepool... ... ... (E) { Graduate, Dec. 1894; Member, Oct. 1896 }
Messenger, Thomas, Paris House, Snargate Street, Dover, Kent ... (E) Mar. 1887
Metcalf, Thos., 18, John Street, Sunderland... ... (S) { Graduate, May 1885; Member, Nov. 1893 }
Metcalfe, C. S., 24, Croft Avenue, Sunderland ... ... (E) Nov. 1884
Micheli, Pietro, Jun., Via Sottoripu, No. 1, piano nobile, Genoa, Italy ... ... (E & N A) Oct. 1888
Middlemass, Thomas, 3, Albert Place, Norton Road, Stockton-on-Tees... ... ... (S) Oct. 1889

ELECTED.

Middleton, H., 20, Lynnwood Avenue, Newcastle-upon-Tyne (I & S M) Jan. 1893
Middleton, Robert Alexander, c/o Messrs. Vickers, Sons & Maxim, Ltd., Naval Construction Works, Barrow-in-Furness ... (N A) Oct. 1892
Millar, Thos., c/o Messrs. Sir W. G. Armstrong, Whitworth & Co., Ltd., Walker Shipyard, Walker-on-Tyne ... ... (S) Nov. 1884
Mills, John, 7, Ledard Street, Langside, Glasgow ... ... (E) Feb. 1888
Mills, William, Atlas Works, Bonners Field, Sunderland ... ... (E) Feb. 1890
Milton, J. T., Lloyd's Register of Shipping, 2, White Lion Court, Cornhill, London, E.C. ... ... (E SUR) Nov. 1886
Moffatt, James, 7, Murray's Terrace, Belfast, Ireland (E) { Graduate, Dec. 1889; Member, Oct. 1892 }
Moffatt, William Graham, 44, Lennox Avenue, Scotstoun, Glasgow ... ... (E) Mar. 1899
Moffitt, George, c/o Messrs. The Blyth Shipbuilding Co., Blyth ... (S) Oct. 1888
Moffoot, Alexander, 43, Bedford Street, North Shields ... ... (S) Mar. 1898
Montgomerie, Hugh, 38, King John Terrace, Heaton, Newcastle-upon-Tyne ... ... (S) Nov. 1897
Moody, Thomas V., 7, The Grove, Gosforth, Newcastle-upon-Tyne (E) Dec. 1887
Moore, Frederick, c/o Messrs. Wilson, Sons & Co., Ltd., Bahia ... (E) Oct. 1890
Moore, Wm. Henry, 18, George Road, Wallsend-on-Tyne ... ... (E) Nov. 1897
Moorsom, Frederick, Victoria Road, West Hartlepool ... ... (S) Feb. 1898
Morgan, W. H., 22, Rochdale Street, Wallsend-on-Tyne ... ... (E) Nov. 1884
Morison, D. B., 8, Albion Terrace, Hartlepool ... ... (E) Feb. 1885
Mörk, Peter, 31, Holsteinsgude, Copenhagen ... ... (E) Nov. 1884
Morrison, Robt., Highfield, St. Aidan's Road, South Shields ... (E) Nov. 1886
Morrison, William, Lloyd's Register of Shipping, Maritime Buildings, Dundee ... ... (E SUR) Oct. 1890
Morton, David, Jesmond House, 98, Baring Street, South Shields (S) Feb. 1898
Morton, Richard Fraser, Lloyd's Register of Shipping, Buckingham Chambers, St. James Street, Sheffield ... (E SUR) Oct. 1890
Mould, Francis H., 36, Salter's Road, Gosforth, Newcastle-upon-Tyne ... ... (E) { Graduate, Feb. 1892; Member, Jan. 1897 }
Mountain, William Chas., Messrs. Ernest Scott, Mountain, & Co., Close, Newcastle-upon-Tyne ... ... (E E) Feb. 1889
Muir, Alfred Edward, Messrs. J. L. Thompson & Sons, North Sands Shipyard, Sunderland ... ... (S) Mar. 1893
Muir, Chas. M., 39, Forster Street, Sunderland ... ... (S) May, 1889
Muir, Robert, 11, Clarence Crescent, Whitley, near Newcastle-upon-Tyne ... ...(SUR) Oct. 1886
Muir, Robert Home, 1, Lovaine Crescent, Newcastle-upon-Tyne ... (S) Oct. 1892
Munck, Ove. Holger, c/o Messrs. Burmeister & Wain, Shipbuilders, Copenhagen, Denmark ... ... (S) Feb. 1899
Musgrave, Evers, 147, St. Owen Street, Hereford ... (E) { Graduate, Nov. 1891; Member, Oct. 1895 }
Myles, David, Northumberland Engine Works, Wallsend-on-Tyne (E) Nov. 1884

N.

Nastoupil, John, Chief Engineer, Austro-Hungarian Navy, Marine Casino, Pola, Austria ... ... (E) Nov. 1890
Neill, William Reid, 15, Salem Hill South, Sunderland ... ... (E) Dec. 1897
Nelson, Thomas H., 55, Great Tower Street, London, E.C. ... (E) Oct. 1898

ELECTED.

Nevins, William, 28, Brookbank Road, Lewisham, London, S.E.... (E) Mar. 1894

Nichol, Bryce G., 84, Third Avenue, Heaton, Newcastle-upon-Tyne ... ... (E) { Graduate, Oct. 1891 / Member, May 1898

Nicholls, H. E., 25, Churchill Street, Sunderland ... ... (E) Nov. 1893

Nichols, Walter W., 30, Denmark Street, Gateshead-on-Tyne ... (E) May 1895

Nicholson, John S., North View, Mowbray Road, Westoe, South Shields ... ... (E) Nov. 1893

Nicholson, Joseph Cook, Collingwood Street, Newcastle-upon-Tyne (E) Feb. 1897

Nicholson, Thos. Head, 90, Rye Hill, Newcastle-upon-Tyne ... (E) Nov. 1897

Nicol, John M., 15, Linskill Terrace, North Shields ... ... (E) Nov. 1884

Nicolson, G. C., H.M.S. "Rambler," North America and West India Stations ... ... (E) { Graduate, Oct. 1885 / Member, Oct. 1888

Niven, William A., 6, Jackson Street, Walker-on-Tyne ... ... (E) Nov. 1898

Noble, George, 7, Dean Street, Newcastle-upon-Tyne ... ... (E) May 1893

Noble, Harry, Northern Machine Tool Works, Brewery Lane, Felling-on-Tyne ... ... (E) Nov. 1888

Nodder, Joseph, Ash Lea, Crabtree, Sheffield ... ... (F M) May 1893

Norman, W. S., Orchard House, Whitby, near Chester ... ... (E) Nov. 1884

Norton, Harold P., Engineer Corps U.S. Navy, Washington, U.S.A. ... ... (E) Oct. 1890

Noton, F. R., Lloyd's Register of Shipping, 347, Argyle Street, Glasgow ... ... (S) Nov. 1884

Nunes, Enrique E., 1898 Calle Virreycs, Belgrano, Buenos Ayres (E) April 1891

O.

O'Halloran, Timothy, c/o Messrs. Booth & O'Halloran, 13, Rue du Bresil, Antwerp, Belgium... ... ... (E) Jan. 1895

O'Neil, J. J., 2, Erith Terrace, Sunderland ... ... (E) Nov. 1884

Ord, Godfrey C., The Esplanade, Sunderland ... ... (E E) Jan. 1897

Orde, E. L., c/o Messrs. Sir W. G. Armstrong, Whitworth & Co., Ltd., Walker Shipyard, Newcastle-upon-Tyne ... ... (E) Oct. 1887

Orlando, Chev. Giuseppe, Cantiere Navale, Fratelli Orlando, Leghorn ... ... (N A) Jan. 1893

Ormonde, John Grey, 35, Percy Gardens, Tynemouth ... ... (E) Nov. 1897

Orr, John, B.Sc., Lecturer in Engineering, South African School, Kimberley, S.A. ... ... (E) Mar. 1897

Orr, Reginald, Kent Villa, Roxborough Park, Harrow-on-the-Hill, Middlesex ... ... (E) { Graduate, Mar. 1890 / Member, Oct. 1892

Ortton, Alfred R., 27, General Graham Street, Chester Road, Sunderland ... ... (E) Nov. 1898

Owens, J. Switzer, B.A., Meadow Cottage, Dymechurch, Kent ... (E) Oct. 1898

Oxley, G., 51, Norman Terrace, Howdon-on-Tyne ... ... (S) Nov. 1884

Oxton, Walter, 96, Blackpool Street, Burton-on-Trent (E) { Graduate, Dec. 1890 / Member, May 1894

P.

Parsons, Hon. Charles A., Holeyn Hall, Wylam-on-Tyne... ... (E E) Dec. 1887

Parsons, Harry F., c/o P. Brotherhood, Esq., Belvedere Road, Westminster Bridge, London, S.E. ... ... (E) Dec. 1890

ELECTED.

Pascoe, J. R., Tyrmont, Woodford Green, Essex (*Life Member*) ... (S) Dec. 1889
Patterson, Jas., Hawthornden, Knock, Belfast, Ireland ... ... (E) Nov. 1884
Pattison, Jos., 123, Bute Road, Cardiff ... ... (E) Nov. 1884
Paulin, William J., 47, Clarence Crescent, Shieldfield, Newcastle-upon-Tyne ... ... (E) April 1897
Paulson, John, c/o Messrs. William Cramp & Sons, Shipbuilders, Philadelphia, Pa., U.S.A.... ... ... (S) Feb. 1886
Paxton, John F., 52, Walker Terrace North, Gateshead ... ... (E) May, 1899
Payne, Henry Fernie, 15, Willowbank Road, Devonshire Park, Birkenhead ... ... (E) Dec. 1895
Pearson, James T., 10, Beech Grove Road, Newcastle-upon-Tyne ... ... { Graduate, Nov. 1893 / Member, Dec. 1897
Penney, R. H., Board of Trade Offices, 79, Mark Lane, London, E.C. ... ... (S SUR) Nov. 1884
Pepper, W., 9, West Villas, Oxbridge Lane, Stockton-on-Tees ... (E) Nov. 1888
Perrett, Jos. Richard, Victoria Villa, Low Fell, Gateshead-on-Tyne ... ... (N A) Nov. 1897
Petersen, John L., Havelock House, Victoria Road, West Hartlepool (SUR) Oct. 1888
Petree, James, Lloyd's Register of Shipping, Oriel Chambers, Water Street, Liverpool ... ... (N A SUR) Oct. 1885
Petterson, Carl Edwin, 7, Vestra Hamngaten, Gothenburg, Sweden (E) Oct. 1891
Philipson, Roland, Tynemouth... ... ... (E) Dec. 1884
Phorson, P., Glen Lea, Roker, Sunderland ... ... (S) Nov. 1884
Piaud, Leon, 8, Boulevard de la Republique, Chatou, Paris ... (N A) Nov. 1888
Pirrie, Norman, c/o Messrs. Babcock, Wilcox, & Co., Limited, 147, Queen Victoria Street, London, E.C. ... ... (E) Nov. 1897
Pitt, Frederick William, 550, Chester Road, Old Trafford, Manchester ... ... (E SUR) Oct. 1890
Poli, Rodolfo, Chioggia, Italy ... ... (N A) Jan. 1890
Pollard, T., c/o Messrs. Pulsometer Engineering Co., Nine Elms Ironworks, London, S.W. ... ... (E) Dec. 1896
Potts, Cuthbert Ivan, 4, Sidney Road, Bootle, Liverpool ... ... (E) Oct. 1895
Potts, Robert L., Hill House, Deptford, Sunderland ... ... (S) Oct. 1888
Powell, James Richard, 89, Exchange, Mount Stuart Square, Cardiff ... ... (C E) May 1894
Price, F. D., 6, Osborne Villas, Jesmond, Newcastle-upon-Tyne (E & S) Oct. 1888
Price, John, 6, Osborne Villas, Jesmond, Newcastle-upon-Tyne ... (S) Nov. 1884
Pringle, Alfred, 10, Somerset Terrace, Walker-on-Tyne (S) { Graduate, Dec. 1891 / Member, Jan. 1894
Pringle, James G., 10, Somerset Terrace, Walker-on-Tyne... ... (S) Oct. 1892
Purdon, Andrew S., Messrs. Irvine's Shipbuilding and Dry Docks Co., Limited, West Hartlepool ... ... (S) Oct. 1892
Purvis, Fred. W., c/o Messrs. Sir W. Gray & Co., Central Shipyard, Hartlepool ... ... (S) April 1893
Putnam, T., Darlington Forge, Darlington ... ... (F M) Nov. 1884

Q.

Quicke, Herbert John, c/o Messrs. Harfield & Co., Blaydon Ironworks, Blaydon-on-Tyne ... ... (E) Feb. 1891

R.

		ELECTED.
Ramage, J. T., St. Aubyn's, Bonnington, Edinburgh	(E)	April 1887
Ramage, John Anderson, 74, Glen Terrace, Hebburn-on-Tyne ...	(S)	Oct. 1892
Readhead, Jas., Westoe Hall, South Shields	(S)	Nov. 1884
Readhead, John, 4, Salisbury Place, South Shields...	(E)	Mar. 1886
Readhead, R., South Garth, Westoe Village, South Shields ...	(E)	Nov. 1884
Readhead, W. B., Beach View, South Shields	(S)	Nov. 1886
Reavell, W., Ranleigh Works, Ipswich	(E)	Graduate, April 1885 Member, Oct. 1887
Reed, James, Messrs. Palmer's Shipbuilding and Iron Co., Ltd., Jarrow-on-Tyne	(S)	Dec. 1897
Reed, Joseph, Angerton House, North Shields	(E)	Oct. 1889
Reed, J. W., c/o Messrs. Palmer's Shipbuilding and Iron Co., Limited, Engine Works Department, Jarrow-on-Tyne ...	(E)	Nov. 1884
Reed, Richard, c/o Messrs. Sir Raylton Dixon & Co., Cleveland Dockyard, Middlesbrough	(S)	Oct. 1894
Reid, John Robert, 88, Leslie Terrace, Aberdeen	(E)	Nov. 1898
Rennoldson, C., Messrs. J. P. Rennoldson & Sons, South Shields	(S)	Jan. 1886
Rennoldson, Jos. M., Messrs. J. P. Rennoldson & Sons, South Shields	(S)	Feb. 1886
Renton, John, 1, Akenside Hill, Newcastle-upon-Tyne ...	(M SUR)	April 1895
Reynolds, Charles H., c/o Messrs. Burmeister & Wain, Shipbuilders, Copenhagen, Denmark	(S)	Mar. 1889
Reynolds, W. G., 4, Ulfra Terrace, South Shields	(E)	Oct. 1886
Richardson, Sir Thomas, B.A., M.P., Hartlepool Engine Works, Hartlepool	(E)	April 1888
Richardson, Wigham, Neptune Works, Walker-on-Tyne	(S)	Nov. 1884
Rickaby, A. A., Bloomfield Engine Works, Sunderland	(E)	Mar. 1888
Ridley, J. H., Messrs. R. & W. Hawthorn, Leslie & Co., St. Peter's, Newcastle-upon-Tyne	(E)	Nov. 1884
Riley, J. H., Messrs. Riley Bros., Stockton-on-Tees	(B B)	May 1893
Ritson, M., Lloyd's Register of Shipping, 29, Regent Quay, Aberdeen	(E SUR)	Nov. 1884
Ritson, S. M., c/o Messrs. J. H. Hallett, Esq., 123, Bute Docks, Cardiff	(E)	Graduate, Nov. 1887 Member, Nov. 1893
Robinson, William, 20, Croft Avenue, Sunderland ...	(E)	Graduate, May 1885 Member, April 1888
Robson, George, 9, Wellington Terrace, South Shields	(E)	Oct. 1889
Robson, George, 140, Aurelian Terrace, South Shields	(E)	Feb. 1896
Robson, John H., 16, Sunbury Avenue, Newcastle-upon-Tyne ...	(E)	Nov. 1885
Robson, J. M., 4, Abbey Terrace, Gateshead-on-Tyne	(E)	Nov. 1884
Robson, M., 20, Tavistock Place, Sunderland	(S)	Nov. 1884
Robson, Nathaniel E., 15, Laburnum Avenue, Wallsend-on-Tyne...	(E)	Graduate, Dec. 1894 Member, Nov. 1897
Roger, Robert, Stockton Iron Foundry, West Row, Stockton-on-Tees	(E)	Nov. 1888
Rogers, Herbert M., Redcliffe, Durham Avenue, Bromley, Kent	(SUR)	April 1889
Rolf, George, 8, Bentinck Crescent, Newcastle-upon-Tyne ...	(E E)	May 1892
Rolland, Alexander, Villa Ruzic, Susak, Fiume, Hungary... ...	(E)	Mar. 1892
Roper, Leopold, Palace Chambers, Westminster, London, S.W. ...	(N A)	Dec. 1896
Ropner, Robert, Jun., Stockton-on-Tees	(S)	Feb. 1886
Rosen, Jacob	(S)	Nov. 1897
Rosenthal, James H., Woodville, 97, Eltham Road, Lee, Kent ...	(E)	Dec. 1896

ELECTED.

Roseti, Capt. S. G., 353, Santiago del Estavo, Buenos Ayres, Argentine Republic ... ... (N A) June 1896
Ross, Charles, c/o Messrs. Smith's Dock Co., Ltd., North Shields... (E) Jan. 1898
Ross, William, 20, Meadow Side, Dundee ... ... (E) May 1893
Rosser, W. D., Messrs. The Cardiff Pontoon Company, Mount Stuart Square, Cardiff ... ... (S) Nov. 1893
Rowan, Jas., 231, Elliott Street, Glasgow ... ... (E) Nov. 1886
Rowell, G. W., 22, Armstrong Road, New Benwell, Newcastle-upon-Tyne ... ... (E) Feb. 1885
Rowell, H. B., Cleugh Brae, Jesmond East Park, Newcastle-upon-Tyne (*Life Member*) ... ... (S) Nov. 1884
Rusden, L., 14, Sanderson Road, Jesmond, Newcastle-upon-Tyne (E) Nov. 1884
Russell, F. Herbert, Scotia Engine Works, Sunderland ... ... (E) Oct. 1891
Rutherford, G., Messrs. Mercantile Pontoon Co., Roath Dock, Cardiff (S) Oct. 1886
Rutherford, J. T., 19, Crouch Hill, London, N. ... (E) { Graduate, Jan. 1886; Member, Nov. 1893 }
Ryder, C. L., c/o Messrs. John Mills & Sons, Walker Gate Brass Works, Newcastle-upon-Tyne ... ... (E) Oct. 1886

S.

Salmon, P., 5, The Oaks West, Sunderland ... ... (E SUR) Nov. 1884
Sambidge, James, c/o Messrs. J. H. Holmes & Co., Portland Road, Newcastle-upon-Tyne ... ... (E E) Nov. 1891
Sandeman, John Watt, 2, St. Nicholas' Buildings, Newcastle-upon-Tyne... ... ... (E) Oct. 1891
Sanderson, Henry Thomas Barron, Messrs. Sanderson & Co., High Quay, Blyth ... ... (E) Oct. 1891
Sanderson, J., 31, Park Road, Jarrow-on-Tyne ... ... (S) Nov. 1884
Sandison, M., 3, Devonshire Terrace, Newcastle-upon-Tyne ... (E) Dec. 1884
Sawyers, John, c/o Messrs. Thos. Wilson, Sons, & Co., Hull ... (E) Oct. 1886
Schaeffer, A. G., 16, Lombard Street, Newcastle-upon-Tyne ... (E) Nov. 1884
Scott, Ernest, Close Engine Works, Newcastle-upon-Tyne ... (E E) Nov. 1884
Scott, James, c/o Messrs. Consett Iron Co., Blackhill, Co. Durham (E) Oct. 1892
Scott, Joseph, 49, Leazes Terrace, Newcastle-upon-Tyne (E) { Graduate, Dec. 1891; Member, Oct. 1898 }
Scott, Joseph R., 9, Queen Street, Newcastle-upon-Tyne ... ... (E) Oct. 1887
Scott, Walter, 30, Bellevue Terrace, Ayr ... ... (N A) Mar. 1897
Scott, William, c/o Messrs. R. & W. Hawthorn, Leslie & Co., St. Peter's, Newcastle-upon-Tyne ... ... (E) Nov. 1884
Scott, William, Lyndhurst, 19, Plasturton Avenue, Cardiff ... (E) June 1896
Scurfield, George G., 98, Aglionby Street, Carlisle ... ... (E) Mar. 1897
Seabury, Edward, Burnt Mill House, Harlow, Essex ... ... (E) Mar. 1886
Seaman, C. J., 134, High Street, North Stockton-on-Tees ... ... (E) Jan. 1889
Seaton, Albert Edward, Messrs. Earle's Shipbuilding Co., Hull ... (E) Jan. 1891
See, Horace, 1, Broadway, New York City, U.S.A. ... ... (E) May 1896
Sergent, William John, 5, Lovaine Place, Newcastle-upon-Tyne... (E) Oct. 1898
Shand, H., 64, Osborne Road, Newcastle-upon-Tyne ... ... (E) Nov. 1884
Sharp, A. E., c/o Messrs. The Peninsular and Oriental Steam Navigation Co., 122, Leadenhall Street, London ... ... (E) Nov. 1884
Sharp, Mark, 144, Albert Road, Jarrow-on-Tyne ... ... (E) Dec. 1889
Shaw, Jas., 26, Sandhill, Newcastle-upon-Tyne ... ... (M SUR) Jan. 1885

ELECTED.

Sheriff, Thomas, c/o Messrs. Robert Mackill & Co., 29, Waterloo Street, Glasgow ... ... (E) April 1890
Short, J. Y., 13, John Street, Sunderland ... ... (S) Nov. 1884
Short, John Gill, 57, John Street, Sunderland ... ... (NA) Feb. 1899
Short, Jos., 13, John Street, Sunderland ... ... (S) Nov. 1884
Short, Thomas S., c/o Messrs. Short Brothers, Pallion, Sunderland ... ... (S) { Graduate, Oct. 1892 / Member, May 1899
Shotton, John W., 32, Mount Stuart Square, Cardiff ... ... (SUR) Nov. 1886
Shute, A. E., 12, Clyde View, Partick, Glasgow ... ... (E) Dec. 1892
Sibson, T., Heworth Shore Engine Works, Felling, R.S.O. ... (E) Dec. 1898
Sibun, William, Lloyd's Register of Shipping, Bute Docks, Cardiff (SUR) Mar. 1896
Simpson, Kenneth, c/o Messrs. Parsons Marine Steam Turbine Co., Wallsend-on-Tyne ... ... (S) { Graduate, Dec. 1893 / Member, Oct. 1895
Sinclair, R., c/o Messrs. J. Wildridge & Sinclair, Consulting Engineers, 97, Pitt Street, Sydney, N.S.W., Australia ... (C E) Nov. 1884
Sinton, John K., 26, Sandhill, Newcastle-upon-Tyne ... ... (E) Nov. 1885
Sisson, Wm., Gloucester ... ... (E & N A) Oct. 1888
Sitwell, John K., 24, Archbold Terrace, Newcastle-upon-Tyne... ... ... (E) { Graduate, Nov. 1896 / Member, Oct. 1898
Sivewright, G. W., 5, Radcliffe Terrace, Hartlepool ... ... (S) Nov. 1886
Skinner, Leslie, Ravensbourne Terrace, South Shields (S) { Graduate, Dec. 1886 / Member, Oct. 1891
Smith, C. E., Cowesby, Clifton Avenue, West Hartlepool ... (E) Nov. 1888
Smith, C. H., Custom House Chambers, Quayside, Newcastle-upon-Tyne ... ...(SUR) Oct. 1898
Smith, Eustace, Guildhall, Newcastle-upon-Tyne ... ... (S) Nov. 1884
Smith, L. Eustace, 87, Jesmond Road, Newcastle-upon-Tyne... ... ... (E) { Graduate, Oct. 1889 / Member, Oct. 1892
Smith, Thomas, Steam Crane Works, Old Foundry, Rodley, near Leeds (E) Oct. 1888
Smith, Thomas Edward, Messrs. John Smith & Sons, Newgate Street, Newcastle-upon-Tyne ... ... (E) April 1885
Smith, Wm., 152, Roker Avenue, Sunderland, M. ... ... (E) Nov. 1884
Smith, Wm. Stawart, West Villa, The Green, Wallsend-on-Tyne ... ... (S) { Graduate, Nov. 1893 / Member, Dec. 1897
Snook, Francis W. G., 10, Hawthorn Street, Newcastle-upon-Tyne (E) Dec. 1896
Soliani, Nabor, Col., Direttore del Cantiere Ansaldo, Sestri-Ponente, Italy ... ... (S) Jan. 1885
Sowter, Isaac G., 82, Scott Street, Cleveland, Ohio, U.S. America (E) Jan. 1889
Spark, H. King, Messrs. The Anti-Attrition Metal Co., Ltd., Emerson Street, Southwark, London, S.E. ... ... (E) May 1898
Spear, John, c/o Messrs. T. Wilson & Sons, Hull ... ... (E) Oct. 1887
Spearman, Richard, Eachwick House, Dalton, Newcastle-upon-Tyne (E) Feb. 1889
Spence, Donald, 205, Albert Road, Jarrow-on-Tyne... ... ... (S) Oct. 1898
Spence, W. G., c/o Messrs. Wigham Richardson & Co., Neptune Works, Walker-on-Tyne (*Life Member*) ... ... (E) Nov. 1884
Spencer, J. W., Newburn Steel Works, Newburn-on-Tyne ... (E) Feb. 1885
Squire, Charles E., Corporation Electricity Works, Blackpool (E E) { Graduate, Nov. 1893 / Member, Oct. 1898
Stafford, William, 233, Coatsworth Road, Gateshead-on-Tyne ... (E) Nov. 1885
Staig, William Andrew, Station Road, Wallsend-on-Tyne ... (E) Feb. 1897
Stanley, John T., 70, Falmouth Road, Heaton, Newcastle-upon-Tyne ... ... (E) Oct. 1898

ELECTED.

Stansfield, George R., The Grove, Westoe, South Shields ... ... (E) Mar. 1891
Stephen, A. E., Linthouse, Govan, Glasgow ... ... (E & S) June 1896
Stephen, John Murray, Linthouse Engine Works, Govan, Glasgow (E) Oct. 1895
Stephens, H. C. J., 94, Fortess Road, Kentish Town, London, N.W. ... ... (E) { Graduate, Oct. 1890; Member, Nov. 1897 }
Stephenson, Bernard, 212, Anlaby Road, Hull ... ... (E) Dec. 1896
Stephenson, C., 2, Elm Terrace, The Green, Wallsend-on-Tyne ... (S) Nov. 1884
Stevenson, Wm., Bank Chambers, Sandhill, Newcastle-upon-Tyne (E) Nov. 1884
Stewart, James, 13, Otterburn Terrace, Jesmond, Newcastle-upon-Tyne... ... ... (E) Oct. 1890
Stirling, Andrew, Jun., 1, Greenvale Terrace, Dumbarton... ... (E) Feb. 1888
Stirzaker, J. C., 16, Grosvenor Place, Newcastle-upon-Tyne ... (E) Nov. 1884
Stoddart, A. Lane, 6, Ashfield Terrace, Heworth Village, Felling-on-Tyne, R.S.O. ... ... (S) Nov. 1898
Stoddart, J. E., Lloyd's Register of Shipping, White Lion Court, Cornhill, London, E.C. ... ... (E SUR) Oct. 1888
Stoddart, Swinton, 5, Ormonde Street, Sunderland ... (S) { Graduate, May 1885; Member, Nov. 1892 }
Summers, James, 114, Grange Road West, Middlesbrough ... (E) Mar. 1889
Surtees, Francis V., Westfield, Renfrew ... ... (S) Dec. 1892
Surtees, R., Frame House, Low Teams, Gateshead-on-Tyne ... (E) Nov. 1884
Swan, A. S., Guildhall Chambers, Newcastle-upon-Tyne ... ... (S) Nov. 1888
Swan, Charles Sheriton, c/o Messrs. C. S. Swan & Hunter, Wallsend-on-Tyne... ... ... (S) { Graduate, Nov. 1890; Member, Mar. 1894 }
Swan, H. F., North Jesmond, Newcastle-upon-Tyne (*Life Member*) (S) Nov. 1884
Swinburne, M. W., 117, Park Road, Newcastle-upon-Tyne ... (E) Nov. 1884
Swinburne, T. M., Bewick Road, Gateshead-on-Tyne ... ... (E) Jan. 1885
Swinney, W., 10, Wentworth Terrace, Westoe Lane, South Shields (E) Dec. 1888
Syme, James, Fairfield Works, Govan, Glasgow ... ... (E) Oct. 1892

T.

Tate, Chas. H., 7, Side, Newcastle-upon-Tyne ... ... (N A) Nov. 1884
Taylor, Alexander, Maritime Buildings, King Street, Newcastle-upon-Tyne ... ... (E) Nov. 1884
Taylor, John, 1, St. Alban's Place, Tynemouth ... ... (E) Dec. 1894
Taylor, J. W. H. Maxwell, 5, East Parade, Newcastle-upon-Tyne (E) Feb. 1898
Teasdale, John, c/o Messrs. Vickers, Son & Maxim, Naval Construction Works, Barrow-in-Furness ... ... (E) Mar. 1898
Thearle, Samuel James P., 6, Fern Avenue, Jesmond, Newcastle-upon-Tyne ... ...(SUR) Feb. 1899
Thomas, Benjamin, 25, Seventh Avenue, Heaton, Newcastle-upon-Tyne ... ... (E) Feb. 1899
Thompson, Arthur E., 19, The Crescent, Gateshead-on-Tyne ... (E) May 1898
Thompson, C. E., Messrs. J. L. Thompson & Sons, North Sands, Sunderland... ... ... (S) Nov. 1884
Thompson, Chas. Henry ... (S) Feb. 1898
Thompson, Jas., 2, Carlton Terrace, Sunderland ... ... (E) Dec. 1886
Thompson, John Augustus, 9, Billiter Square, London, E.C. (E & N A) Oct. 1892

ELECTED.

Thompson, J. L., North Sands Shipyard, Sunderland ... ... (S) Nov. 1884
Thompson, Robert, North Sands Shipyard, Sunderland ... ... (S) Nov. 1884
Thomson, James, M.A., c/o Messrs. Sir W. G. Armstrong, Whitworth & Co., Ltd., Ordnance Works, Elswick, Newcastle-upon-Tyne ... ... (E & N A) Nov. 1890
Thorn, W. H., 5, Waterville Terrace, North Shields ... ... (E) Nov. 1884
Thornton, James, c/o Messrs. R. Gordon & Co., Post Office Buildings, Hudson Street, South Shields ... ... (E) April 1893
Thornton, Thomas Lee, 45, Northcote Street, Newcastle-upon-Tyne (E) Feb. 1898
Tinn, Fred. D., North View, Mowbray Road, South Shields ... (S) Nov. 1891
Tinn, George, 205, Cardigan Terrace, Gateshead-on-Tyne ... ... (E) Dec. 1897
Tocher, J. W., c/o Messrs. Wallsend Slipway and Engineering Co., Wallsend-on-Tyne ... ... (S) Mar. 1898
Todd, John P., 13, Chatsworth Street, Sunderland ... ... (E) Dec. 1897
Toomer, C. R., Ravensworth, Westoe, South Shields ... ... (E) Jan. 1899
Tovey, Alfred F., Ovington Cottage, Prudhoe, Northumberland (E) Dec. 1894
Towers, Edward, Jun., 4, Latimer Street, Tynemouth (E) {Graduate, Nov. 1886 / Member, Oct. 1888}
Toyne, G. A. Dryden, Lloyd's Register of Shipping, 3, St. Nicholas' Buildings, Newcastle-upon-Tyne ... ...(SUR) April 1899
Trail, John, 21, Grosvenor Place, Jesmond, Newcastle-upon-Tyne (M S) Oct. 1892
Traill, Robert, 8, Newcastle Street, North Shields ... ... (E) Oct. 1896
Trechmann, J. E., Norton Lodge, Stockton-on-Tees ... ... (E) Feb. 1898
Trewent, F. J., 43, Billiter Buildings, Billiter Street, London, E.C. ... ... (S) Dec. 1884
Trowell, Wm. John, Board of Trade Surveyor's Offices, Custom House, Arcade, Liverpool ... ... (E) Oct. 1894
Turnbull, John, Bank House, Norfolk Street, Sunderland... ... (E) Nov. 1898
Turner, S. J., 71, Warwick Street, Heaton, Newcastle-upon-Tyne (E) Mar. 1887
Turple, David Whyte, c/o Messrs. W. Pickersgill & Sons, Southwick, Sunderland ... ... (S) Dec. 1895
Tuxen, Holger, Bureau Veritas Register of Shipping, Custom House Court, Quayside, Newcastle-upon-Tyne ... ... (S) Nov. 1896
Twaddell, James L., 4, St. John's Terrace, Jarrow-on-Tyne ... (S) Oct. 1891
Tweedy, G. F., Kelso House, Newcastle-upon-Tyne ... ... (E) May 1899
Tweedy, J., Neptune Works, Walker-on-Tyne ... ... (E) Nov. 1884
Tweedy, John, 22, Lawson Street, North Shields ... ... (E) April 1899
Twigden, George J. ... (E) Jan. 1890
Tyzack, George, Dean Street, South Shields... ... ... (E) April 1888

U.

Ullstrom, Otto, 84, Leadenhall Street, London, E.C. ... ... (S) Nov. 1884
Ulm, John, The Arsenal, Pola, Austria ... ... (E) Nov. 1885
Urquhart, Douglas M., 16, Forster Street, Sunderland ... ... (E) May 1899

V.

Vardey, George, 188, Helmsley Road, Newcastle-upon-Tyne (E) {Graduate, Oct. 1894 / Member, 1898}
Vianson, N. E., *viâ* Corsica 20/5, Genoa, Italy ... ... (E) Dec. 1885
Vick, R. W., Messrs. Furness, Withy & Co., Middleton Shipyard, West Hartlepool ... ... (S) Nov. 1888
Vivet, Leon, 25, Rue de Pornichet, St. Nazaire, France ... ... (N A) Nov. 1892

W.

ELECTED.

Wadagaki, Yasuzo, 40, Egerton Road, Greenwich, London, S.E. ... (E) Jan. 1891
Wait, Thomas Herbert, Cail's Buildings, Quayside, Newcastle-upon-Tyne ... ...(C E) Dec. 1893
Wake, Tom, 2, Cliff Terrace, Hartlepool ... ... (E) April 1892
Wakeham, John F., 21, Tenth Avenue, Heaton, Newcastle-upon-Tyne ... ... (S) { Graduate, Mar. 1893 / Member, Oct. 1895
Walker, Archibald, 143, Leith Walk, Leith, N.B. ... ... (E) April 1887
Walker, Henry, 11, Oxford Terrace, Gateshead-on-Tyne ... ... (E E) Feb. 1893
Walker, James, c/o Messrs. River Tyne Commissioners' Office, Bewick Street, Newcastle-upon-Tyne ... ... (C E) Nov. 1898
Walker, John, c/o Messrs. R. Stephenson & Co., Limited, South Street, Newcastle-upon-Tyne ... ... (E & S) Nov. 1891
Wallau, J., 16, Woodhouse Terrace, Gateshead-on-Tyne ... ... (E) Nov. 1884
Waller, Thomas Naunton, 10, Holly Avenue, Jesmond, Newcastle-upon-Tyne ... ... (E) May 1898
Walliker, John George, c/o Messrs. Hodges & Walliker, Barry Docks, South Wales ... ... (E) May 1896
Wallis, Robert, Wh.Sc., Point Pleasant House, Wallsend-on-Tyne. (E) April 1891
Walter, Max, Norddeutscher Lloyd, Central Bureau, Bremen ... (S) Feb. 1893
Walton, J. G., 26, Fenchurch Street, London, E.C. ... ... (E) Nov. 1884
Walton, Samuel, 5, Tyne View Terrace, South Shields ... ... (E) Dec. 1893
Warburton, J., 4, Beauclerc Terrace, Sunderland ... ... (S) Nov. 1884
Warburton, John Arthur, 47, Harrogate Street, Sunderland (E) { Graduate, Mar. 1894 / Member, Nov. 1896
Ward, Herbert John, Lenox, Mosley Hill, Liverpool ... (SUR) Nov. 1898
Ward, John, c/o Messrs. W. Denny & Bros., Dumbarton ... ... (S) Dec. 1891
Ward, Mark M., 95, West Percy Street, North Shields ... ... (E) Dec. 1893
Wardale, Henry, 5, Collingwood Terrace, Gateshead-on-Tyne ... (E) Feb. 1888
Warden, Thomas M., 21, Windermere Street, Gateshead-on-Tyne (E) Oct. 1894
Wass, Archibald D., 148, Cardigan Terrace, Heaton, Newcastle-upon-Tyne ... ... (S) Nov. 1898
Watson, Thomas Henry, 10, Neville Street, Newcastle-upon-Tyne (SUR) Jan. 1896
Watts, Philip, Elswick Shipyard, Newcastle-upon-Tyne ... ... (S) Nov. 1885
Wedgwood, Josiah, c/o Messrs. Armstrong, Whitworth & Co., Elswick Shipyard, Newcastle-upon-Tyne ... ... (N A) Nov. 1897
Weidemann, Nils, Det-Norske Veritas, Christiania, Norway ...(SUR) Jan. 1892
Weighton, R. L., M.A., Durham College of Science, Barras Bridge, Newcastle-upon-Tyne ... ... (E) Nov. 1884
Weir, George Dobie, Northumberland Engine Works, Wallsend-on-Tyne ... ... (E) Oct. 1894
Weir, John, c/o Messrs. J. Scott & Co., Abden Works, Kinghorn, N.B. ... ... (E) Nov. 1884
Weir, William, c/o Messrs. Wigham Richardson & Co., Walker-on-Tyne ... ... (E) Nov. 1889
Welton, J. G., 41, Sydenham Terrace, Sunderland .. .. (E) Nov. 1893
West, Henry H., British and Foreign Chambers, 5, Castle Street, Liverpool ... ... (E & N A) Oct. 1886
Westgarth, Tom, Messrs. Sir C. Furness, Westgarth, & Co., Middlesbrough ... ... (E) Oct. 1886
Westmacott, Alfred, Benwell Hill, Newcastle-upon-Tyne (E) { Graduate, Dec. 1885 / Member, Nov. 1892

ELECTED.

Westmacott, P. G. B., Rose Mount, Sunninghill, Berks ... ... (E) Nov. 1884
Wheater, Chas. Busfield, 33, Rothwell Road, Gosforth ... ... (E) Oct. 1894
White, C., 13, Mosley Street, Newcastle-upon-Tyne ... ... (E) Nov. 1884
White, Ernest T., 1, Camborne Place, Gateshead-on-Tyne (E) { Graduate, May 1889 / Member, Jan. 1894
White, R. Saxon, Messrs. Sir W. G. Armstrong, Whitworth & Co., Ltd., Walker Shipyard, Walker-on-Tyne ... ... (S) Nov. 1884
Whitfield, Thomas, Messrs. Tyne Dock Engineering Co., South Shields ... ... (E) April 1896
Whittaker, Frederick W., Dockyard, Coburg Dock, Messrs. Mersey Docks and Harbour Board, Liverpool ... ... (E) Oct. 1892
Whyte, Wm., 12, Lombard Street, Newcastle-upon-Tyne ... ... (E) Nov. 1884
Widdas, T. D., 56, Plasturton Avenue, Cardiff ... ... (SUR) April 1885
Wight, Henry D., 94, Cleveland Crescent, Sunderland ... ... (E E) Dec. 1898
Wildridge, Richard, 48, Sandyford Street, Glasgow ... (E) { Graduate, Oct. 1895 / Member, Oct. 1898
Wilkie, J., 24, Camden Street, Southwick, Sunderland ... ... (E) Nov. 1884
Wilkin, Ernest V., 47, Saint Mary Axe, London, E.C. (C E) { Graduate, Nov. 1892 / Member, Oct. 1898
Willcox, Henry Walker, 15, Norfolk Street, Sunderland ... ... (C E) Nov. 1897
Willcox, Percy F. C., 15, Norfolk Street, Sunderland ... ... (C E) Nov. 1897
Willcox, R. J. N., 15, Norfolk Street, Sunderland ... (E) { Graduate, Mar. 1892 / Member, Dec. 1897
Williams, Thomas R., Chantiers, Navals de Nicolaieff a Bouffioulx, Chatelineau (Hainaut), Belgique ... ... (S) Oct. 1895
Wilson, Henry J. H., 117, Bede Burn Road, Jarrow-on-Tyne ... (E) Nov. 1895
Wilson, James, Messrs. T. Richardson & Sons, Hartlepool Engine Works, Hartlepool ... ... (E) Jan. 1896
Wilson, John Paul, Messrs. Palmer's Shipbuilding Co., Jarrow-on-Tyne... ... ... (S) Oct. 1895
Wimble, Arthur, c/o Messrs. Boyd & Co., Limited, Shanghai, China (E) Dec. 1893
Winstanley, P. D., Bureau Veritas Register of Shipping, 155, Fenchurch Street, London ... ... (S) Nov. 1884
Winter, Thor., Aktiebolaget Sandvikens Skeppsdocka och mekaniska verkstad, Helsingfors, Finland ... ... (E) Nov. 1893
Withy, H., Middleton Shipyard, West Hartlepool ... ... (S) Nov. 1884
Wood, Henry Alfred, Oakfield Road, North Ormesby, Middlesbrough-on-Tees ... ... (S) Dec. 1893
Wood, John Scott, 6, Eslington Terrace, Newcastle-upon-Tyne ... ... (S) { Graduate, Oct. 1891 / Member, Oct. 1896
Wood, Joseph, Foundry Manager, Deptford Yard Brass Works, Sunderland... ... ... (E) Mar. 1895
Wood, William, 6, Eslington Terrace, Newcastle-upon-Tyne ... (S) Nov. 1897
Wortley, Henry B., Kent House, Egerton Park, Rock Ferry, Birkenhead... ... ... (S) { Graduate, Jan. 1886 / Member, Nov. 1892
Wray, Thomas W., Board of Trade Offices, Sunderland ... ...(SUR) Jan. 1895
Wright, R., 5, Hawthorn Terrace, Newcastle-upon-Tyne ... ... (E) Nov. 1884
Wright, William Charles, 17, Wansbeck Gardens, West Hartlepool (E) Feb. 1898
Wyand, Frederick W., 13, Eldon Street, Newcastle-upon-Tyne ... ... (E E) { Graduate, Oct. 1894 / Member, Jan. 1898
Wyse, Thomas, 25, Albert Drive, Low Fell, Gateshead-upon-Tyne (E) Nov. 1898

Y.

		ELECTED.
Young, Andrew, Bureau Veritas Register of Shipping, 155, Fenchurch Street, London, E.C.	(S)	Graduate, Feb. 1892 Member, May 1893
Young, J. Denholm, 2A, Tower Chambers, Liverpool	(E)	Oct. 1888
Younger, R., Elmire House, Heaton, Newcastle-upon-Tyne ...	(E)	Nov. 1884

Z.

Zeeman, J. H., c/o Nederlandsch Indische Houtaankap, Maatschappij, Semerang, Java	(S)	Oct. 1889

ASSOCIATES.

A.

Anderson, Daniel G., c/o Messrs. W. Angus & Co., Grainger Street West, Newcastle-upon-Tyne	(A)	Nov. 1893
Armstrong, S., Beaconsfield Street, Hartlepool	(A)	Nov. 1888
Arnott, James, 25, Dean Street, Newcastle-upon-Tyne	(S O)	Oct. 1895

B.

Bacon, William Charles, Chadwick House, West Hartlepool ...	(S O)	Dec. 1890
Barklam, George, Burnt Tree Villa, Tipton, Staffordshire ...	(A)	April 1888
Barr, John Smith, 16, Broad Chare, Quayside, Newcastle-upon-Tyne...	(A)	Nov. 1893
Barwick, J. S., Ashbrook Grange, Sunderland	(S O)	Nov. 1884
Bell, J. H., 25, Queen Square, Glasgow	(I & S M)	Oct. 1887
Beynon, Thomas, 9, Dean Street, Newcastle-upon-Tyne	(E A)	Oct. 1891
Bigge, C. W., Northern Counties Club, Newcastle-upon-Tyne ...	(A)	Dec. 1889
Bingham, Col. J. E., West Lea, Ranmoor, Sheffield	(M)	Mar. 1895
Bird, William, 8, Latimer Street, Tynemouth	(A)	May 1896
Borrie, Walter, Messrs. Blair & Co., Ltd., Stockton-on-Tees ...	( )	Jan. 1899
Briggs, R. S., Moorlands, Sunderland	(S O)	Dec. 1886
Brims, D. N., 4, St. Nicholas' Buildings, Newcastle-upon-Tyne ...	(C)	Nov. 1893
Brown, Percy Ledger, 1, St. Nicholas' Buildings, Newcastle-upon-Tyne	(E A)	Oct. 1896
Brunton, John, 3, Prior's Terrace, Tynemouth	(S O)	Oct. 1886
Bullen, Tempest C., c/o Messrs. H. E. Moss & Co., K, Exchange Buildings, Newcastle-upon-Tyne	(S O)	Nov. 1891

C.

Caminos, J. L., Hawthorn Cottage, Cavendish Road, Felixstowe, Suffolk		June 1896
Carr, Ralph, Thornleigh, Clayton Road, Newcastle-upon-Tyne	(A & S O)	Nov. 1886
Caws, Frank, 22, Fawcett Street, Sunderland	(C E)	Oct. 1892
Cay, Arthur, Messrs. Cay, Hall & Co., Queen Street, Newcastle-upon-Tyne	(S O)	Nov. 1884
Cohan, Edward Asher, 2, Rumford Place, Liverpool	(S O)	Nov. 1889
Corbitt, Michael, Springfield, Gateshead-on-Tyne	(R M)	Jan. 1890

		ELECTED
Cory, John, Cardiff	(S O)	June 1896
Coull, John, Baltic Chambers, Quayside, Newcastle-upon-Tyne ...	(S O)	Oct. 1886
Coverdale, R. H., Messrs. J. Coverdale & Sons, Steamship Owners, West Hartlepool	(S O)	Nov. 1888
Craik, A., Messrs. Blyth Dry Dock, Limited, Blyth	(A)	June 1896
Crawford, Thomas, 10, Haldane Terrace, West Jesmond, Newcastle-upon-Tyne	(A)	Oct. 1896
Crosier, Edward James, 3, The Hawthorns, East Boldon	(A)	Oct. 1889
Culliford. J. H. W., 45, West Sunniside, Sunderland	(S O)	Nov. 1884

D.

Dodds, E. F., 36, Side, Newcastle-upon-Tyne	(A)	Nov. 1893
Dodds, John B., 36, Side, Newcastle-upon-Tyne	(CHEM)	Oct. 1888
Donkin, Geo., Jun., 50, Grove Street, Newcastle-upon-Tyne ...	(A)	April 1897
Dove, Edward John, 5, St. Nicholas' Buildings, Newcastle-upon-Tyne	(M)	Oct. 1890
Douglass, John, 58, Fern Avenue, Jesmond, Newcastle-upon-Tyne		Oct. 1898

E.

Eccles, Edward, Royal Insurance Buildings, Queen Street, Newcastle-upon-Tyne (*Life Associate*)	(S O)	Oct. 1887

F.

France, James A., St. John Street, Newcastle-upon-Tyne ...	(M)	Jan. 1898
Frazer, Joseph S., Britannia Buildings, Cardiff	(M)	June 1896
Furness, Sir Christopher, Baltic Chambers, West Hartlepool ...	(S O)	Oct. 1888
Forster, George, 8, Warwick Street, Heaton, Newcastle-upon-Tyne		Oct. 1898

G.

Graham, Frank, Bank Chambers, Mosley Street, Newcastle-upon-Tyne	(E A)	Nov. 1891
Geary, William, Parkside, St. Aidan's Road, South Shields ...	(M S)	May 1899

H.

Hardy, John, Jun., Brunswick Street, West Hartlepool	(I M)	Nov. 1893
Harland, George, 1, Westoe Crescent, South Shields	(A)	Dec. 1888
Harrison, Samuel Turner, The Green, Wallsend	(A)	Nov. 1897
Harrison, Thomas, 9, Bridge Street, Sunderland	(A)	Dec. 1894
Hedley, John H., 7, Ashbrook Terrace, Sunderland...	(S)	Dec. 1886
Henzell, Robert, 43, Sanderson Road, Newcastle-upon-Tyne (*Life Associate*)	(A)	Nov. 1893
Heslop, Richard O., Akenside Hill, Newcastle-upon-Tyne...	(I & S M)	Oct. 1885
Hodge, W. P., c/o Messrs. John Cory & Sons, Mount Stuart Square, Cardiff	(M S)	Mar. 1896
Hogg, John Thomas, Tyneside Brass Works, Barry Docks, South Wales	(I & S M)	April 1896
Holliday, Henry, Beechgrove, Blackhill, Co. Durham	(A)	Nov. 1895
Hollis, H. E., 40, Union Street, Glasgow	(I & S M)	Feb. 1885
Hudson, Ralph M., Jun., 8, The Cedars, Sunderland	(S O)	Dec. 1886
Hudson, Robert, 24, Hotspur Street, Tynemouth	(A)	Nov. 1895

ELECTED.

Hunting, Charles S., I, Exchange Buildings, Quayside, Newcastle-upon-Tyne ... ... (S O) April 1886
Hurndall, Sidney E., Printing Court Chambers, Newcastle-upon-Tyne... ... ... (A) Nov. 1893

I.

Innes, Charles H., Rutherford College, Newcastle-upon-Tyne ... (E) Oct. 1891

J.

Jenkins, Alfred, c/o Messrs. The Mercantile Dry Dock Co., Jarrow-on-Tyne ... ... (A) Nov. 1893
Jobson, W. J., c/o Messrs. Robert Stephenson & Co., South Street, Newcastle-upon-Tyne ... ... (A) May 1889
Jordan, John George, 6, Cedars Crescent, Ryhope Road, Sunderland ... ... (A) Nov. 1892

K.

Knott, James, Prudential Buildings, Newcastle-on-Tyne ... ... (S O) Dec. 1896

L.

Lloyd, John, Deptford Shipyard, Sunderland ... ... (A) Oct. 1894
Lockie, John, Bank Chambers, Sandhill, Newcastle-upon-Tyne ... (S O) Oct. 1892
Lodwidge, Philip, Baltic Chambers, Sunderland ... ... (A) June 1896

M.

Macarthy, George E., 9, Dean Street, Newcastle-upon-Tyne ...(S O) Oct. 1887
Mail, Douglas B., 8, Thornhill Terrace, Sunderland ... ...(M S) Feb. 1895
Maughan, William, 13, Mosley Street, Newcastle-upon-Tyne ... (A) Feb. 1887
McIntosh, R. Y., 34, Dean Street, Newcastle-upon-Tyne ... ... (E A) Nov. 1891
McIntyre, John, 3, Abbotsford Terrace, Newcastle-upon-Tyne ... (S O) Jan. 1885
Meek, John George, 13, Belle Vue Park, Sunderland ... ... (A) Dec. 1894
Milburn, J. D., Queen Street, Newcastle-upon-Tyne ... ... (S O) Nov. 1884
Miller, T. R., 9, Great St. Helen's, London, E.C. ... ... (A & S O) Nov. 1884
Mitcalfe, John Stanley, Chairman of Northern Maritime Insurance Co., Maritime Buildings, Newcastle-upon-Tyne ... (A & S O) Jan. 1892
Morton, Benjamin, 18, St. George's Square, Sunderland ... ...(SUP) Dec. 1895
Muir, James, 2, Dingle Lane, Liverpool ... ... (M S) Nov. 1893
Mulherion, G. F., Birtley Avenue, Tynemouth ... ... (A) Nov. 1884
Muller, J. C. F., 28, Vieille Route, Antwerp ... ...(SUR) Feb. 1890
Murray, Matthew, The Green, Wallsend-on-Tyne ... ... (A) Nov. 1893

N.

Nielsen, Hans Christian, 12, Cliff Terrace, Hartlepool ... ... (S O) Feb. 1898
Nixon, John, c/o Messrs. Blyth Shipbuilding Co., Blyth ... ... (A) Oct. 1894

O.

O'Hagan, James, 99, Quai de la Fosse, Nantes, France ... ... (A) Oct. 1888
Olsen, Hans Benedick, 70, Church Street, West Hartlepool ... (S O) Mar. 1893
Osbourne, Jas., 11, The Oaks, Sunderland ... ... (S) Jan. 1885

P.

Park, Robert, Lauriston, Blackhill, Co. Durham ... ... (A) Dec. 1897
Patterson, Thos., 2, The Elms, Sunderland ... ... (S) Jan. 1885
Petersen, William, Messrs. Petersen & Tate, Bank Chambers, Sandhill, Newcastle-upon-Tyne... ... ... (S O) Nov. 1893

		ELECTED
Phalp, Oliver, Almora, 37, Richmond Road, Cardiff ...	...(SUR)	Feb. 1889
Pinkney, Thomas, 3, Ashbrook Terrace, Sunderland ...	...(S O)	Dec. 1886
Potts, Turnbull, Tyne Docks, South Shields...	...(SUR)	Nov. 1898
Proctor, J. H., 22, Hawthorn Terrace, Newcastle-upon-Tyne ...	(I M)	Nov. 1893
Pybus, William M., Jun., 85, Osborne Road, Newcastle-upon-Tyne		April 1899

R.

Radloff, Captain O., c/o Messrs. Russian Steam Navigation Co., Odessa	...(M S)	Nov. 1891
Raine, John, Baltic Chambers, Sunderland	...(S O)	Nov. 1897
Ramsay, J. W., 13, Northbrook Road, Lee, Kent	(A)	Feb. 1885
Reichwald, A., Lombard Street, Newcastle-upon-Tyne	(A)	Nov. 1884
Reid, Sidney, Printer, Akenside Hill, Newcastle-upon-Tyne ...		Nov. 1884
Renwick, G., Messrs. Fisher, Renwick & Co., Maritime Buildings, King Street, Newcastle-upon-Tyne	...(S O)	Nov. 1884
Ritson, Arthur, 30, West Sunniside, Sunderland	...(S O)	Feb. 1899
Robson, Frederick, 46, Dean Street, Newcastle-upon-Tyne	(S I M)	Oct. 1887
Robson, John William, 6, King Street, Newcastle-upon-Tyne ...	(M)	April 1896
Robson, Thos., Causeway House, Sunderland	...(S O)	Nov. 1884
Runciman, Walter, Fernwood House, Clayton Road, Newcastle-upon-Tyne	...(S O)	May 1895

S.

Scholefield, A., 17, Sandhill, Newcastle-upon-Tyne ...	...(S O)	Nov. 1884
Scott, W. H., Messrs. Scott Brothers, 46, Sandhill, Newcastle-upon-Tyne	...(S O)	Nov. 1884
Snowdon, W. F., 32, Side, Newcastle-upon-Tyne	...(E A)	Dec. 1886
Squance, J. W., 13, The Avenue, Sunderland	...(M S)	April 1888
Storey, Christopher, 28, Holly Avenue, Jesmond, Newcastle-upon-Tyne...	(A)	April 1896
Sutherland, Arthur M., 7, Collingwood Terrace, Newcastle-upon-Tyne	...(S O)	Nov. 1897

T.

Tate, Arthur, Messrs. Petersen & Tate, Bentham Buildings. Side, Newcastle-upon-Tyne	(O)	Nov. 1893
Temple, George T., 8, West View, Wallsend-on-Tyne	(A)	Jan. 1899
Thompson, V. T., Baltic Chambers, Sunderland	...(S O)	Dec. 1886
Todd, John Stanley, Percy Park, Tynemouth	(U)	Nov. 1895
Towers, Edward, 4, Latimer Street, Tynemouth	(A)	Oct. 1888
Trechmann, Otto K., Church Street, West Hartlepool	(S O)	Oct. 1896
Turner, Edwin, 32, Powell Road, Clapton, London, N.E.	(A)	Oct. 1895

W.

Wallace, H. S., 17, Kingsley Place, Heaton, Newcastle-upon-Tyne (Life Associate)	(S)	May 1899
Watson, Thomas W., Gisburn House, Hartlepool	...(M S)	Nov. 1890
Weatheral, Henry, 27, Alderson Street, West Hartlepool	(A)	Feb. 1893
Wight, Robert M., 42, The Exchange, Cardiff	(M)	June 1896
Wilson, F. Alfred, 45, West Sunniside, Sunderland	(I M)	Nov. 1893
Winstanley, Robt. Hope, 8, Kenilworth Road, Newcastle-upon-Tyne	(A)	Nov. 1897
Winter, Edward G., 10, Lincoln Terrace, Gateshead-on-Tyne ...	(A)	May 1898

ELECTED.

Y.

Yeoman, F., Messrs. Murrell & Yeoman, West Hartlepool ... (S O) Nov. 1888
Younger, Robert Laurie, Messrs. Greenock Steamship Co., Limited, Greenock ... ... (A) Feb. 1889

GRADUATES.

A.

Adams, Jas. Wilson, 8, Belle Vue Terrace, Gateshead-on-Tyne ... (E E) Nov. 1897
Adamson, Charles P., c/o W. Kinnaird, Esq., 175, Great Junction Street, Leith, N.B. ... ... (E) Nov. 1897
Andrew, John Davis, 33, Osborne Road, Newcastle-upon-Tyne ... (E) Jan. 1898
Agar, Alfred, 27, Roker Avenue, Sunderland ... ... (E) Oct. 1898
Archer, J. Snowdon, 3, Burnside, Newcastle-upon-Tyne ... ... (E E) Nov. 1898

B.

Beilby, Norman Harry, 1, Kingsley Place, Heaton, Newcastle-upon-Tyne ... ... (E) Dec. 1893
Bentham, Frederick Lister, Exchange Buildings, Middlesbrough (E) Dec. 1892
Binns, Aubrey B., 85, Granville Park, Lewisham, London, S.E. ... (E) Oct. 1894
Bocler, Harry, 19, Azalea Terrace South, Sunderland ... ... (N A) Mar. 1898
Bolam, Joseph H., 46, Northumberland Street, Newcastle-upon-Tyne... ... ... (E) Nov. 1897
Borthwick, Robert J., 8, Kensington Terrace, Newcastle-upon-Tyne... ... ... (E) Dec. 1894
Brigham, Malcolm, Westoe Tower, South Shields ... ... (E) Mar. 1898
Brown, Thomas Scott, Jun., 18, Nixon Street, Newcastle-upon-Tyne ... ... (E) Oct. 1895
Browne, Benjamin C., Jun., 58, Brighton Grove, Newcastle-upon-Tyne... ... ... (E) Oct. 1898
Bulmer, Albert Edward, Inglewood, Prescot, Lancashire ... (E) Nov. 1895
Bulmer, Septimus, 1, Graingerville North, Newcastle-upon-Tyne (E) May 1894

C.

Calvert, E. A., Railway Station House, Whitley, Northumberland... ... ... (E) Oct. 1898
Canning, Chas. E., 31, Park Crescent, North Shields ... ... (S) Dec. 1897
Carr, Ralph, Jun., Thornleigh, Clayton Road, Newcastle-upon-Tyne (E) Jan. 1894
Carverhill, Edward A., 19, Crown Street, Newcastle-upon-Tyne... (E) Oct. 1898
Chapman, John Frederick, 82, Woodland Terrace, Old Charlton, London, S.E. ... ... (E E) Dec. 1895
Chicken, George Percy, 28, Lawton Street, Newcastle-upon-Tyne (E) Dec. 1898
Coulson, Richard H. A., 12, East View, South Shields ... ... (E) April 1897
Craggs, Adolphus, Ivy House, Pelton, Chester-le-Street ... ... (E) Dec. 1897
Crawford, J. F., "Palmyra," St. George's Road, Waterloo, near Liverpool ... ... (E) Nov. 1893
Currie, Hugh B., 41, Eldon Street, Newcastle-upon-Tyne... ... (E) Nov. 1897

D.

Dalziel, E., 97, Sandyford Road, Newcastle-upon-Tyne ... ... (E) Feb. 1898
Danielsen, John William, 24, Cardigan Terrace, Heaton, Newcastle-upon-Tyne ... ... (E) Mar. 1899
Davison, Joseph P., 107, Clumber Street, Newcastle-upon-Tyne... (S) Oct. 1898

ELECTED.

Dickie, James, Jun., 18, Brinkburn Terrace, Westoe South Shields (S) Mar. 1898
Dickie, John P., 18, Brinkburn Terrace, Westoe, South Shields ... (E) Mar. 1898
Dixon, William John, 10, Granville Road, Newcastle-upon-Tyne... (E) Mar. 1896
Dobson, William Gordon, The Chesters, Jesmond, Newcastle-upon-Tyne... ... ... (S) Feb. 1896
Dodds, John Hanbury, National Provincial Bank, Redcar ... (E) Feb. 1896
Donaldson, Henry B., 10, Lily Crescent, Jesmond West, Newcastle-upon-Tyne ... ... (S) Nov. 1897
Doxford, Robert, Jun., Silksworth Hall, Sunderland ... ... (N A) Feb. 1897

E.

Edminston, Alex. R., c/o Mrs. Sheffield, 10, Beaconsfield Square, Hartlepool ... ... (E) Jan. 1898

F.

Featherstonhaugh, Albany, 13, Park Place West, Sunderland ... (E) Oct. 1894
Fenton, Frederick, 15, Kent Street, Jarrow-on-Tyne ... ... (S) Mar. 1898
Fleet, Herbert A., Coney House, Birtley, *via* Chester-le-Street ... (E) Mar. 1897
Forster, Charles M., Woodslea, Newcastle-upon-Tyne ... ... (E) Oct. 1898
Fox, Carter, 7, Coxon Street, Sunderland ... ... (E) Feb. 1898

G.

Gravell, Arthur, 14, Hedley Street, Gosforth, Newcastle-upon-Tyne... ... ... (E E) Jan. 1899

H.

Haig, William G., 31, Harrogate Street, Sunderland ... ... (S) May 1899
Hamilton, James, 112 Sorley Street, Chester Road, Sunderland ... (E) Nov. 1897
Hay, John, 44, Fern Avenue, Newcastle-upon-Tyne ... ... (E) Dec. 1898
Hepburn, James M., 17, Grosvenor Place, Jesmond, Newcastle-upon-Tyne ... ... (E) Nov. 1895
Hills, Lawrence, 2, Somerset Terrace, East Boldon, Newcastle-upon-Tyne ... ... (S) Nov. 1898
Hunter, George Ernest, The Willows, Jesmond, Newcastle-upon-Tyne ... ... (S) Feb. 1898
Hutchinson, Wm. S., Rock Lodge, Roker, Sunderland ... ... (S) May 1899
Hutton, John S., 17, Claremont Place, Newcastle-upon-Tyne ... (E) Nov. 1897

J.

James, Matthew C., Jun., 6, Park Terrace, Gateshead-on-Tyne ... (E E) May 1899
James, Wm. E., 6, Park Terrace, Gateshead-on-Tyne ... ... (S) May 1899
Jepson, Henry ... ... (E) Nov. 1893
Jobling, Vivian, Whickham, Swalwell, R.S.O. ... ... (E) Oct. 1898
Johnson, James, 11, Poplar Crescent, Gateshead-on-Tyne ... ... (E) Oct. 1896

K.

Kent, Samuel N., Lindenhurst, Heaton, Newcastle-upon-Tyne ... (E) Mar. 1896
Kinsey, Wm. E., 9, Laburnum Avenue, Wallsend-on-Tyne ... (E) May 1899

L.

ing, Bryan, Thornhill, Sunderland... ... ... (S) Dec. 1895
ton, James ... ... (E) Jan. 1896

ELECTED.

Lindsay, James D., Fernville, Gosforth, Newcastle-upon-Tyne ... (E E) Jan. 1897
Lishman, John James, Jun., 16, Lovaine Place, North Shields ... (E) Dec. 1892
London, W. J. A., 12, Victoria Square, Jesmond, Newcastle-upon-Tyne ... ... (E) May 1898

M.

Mace, Charles, c/o Messrs. Laird Brothers, Birkenhead ... ... (E) Nov. 1894
Mace, George, 253, Albert Road, Jarrow-on-Tyne ... ... (S) Oct. 1896
McCoull, Cecil, Ovington House, Ovingham, R.S.O., Northumberland .. .. (E) Oct. 1895
McRobie, Frank, 20, Victoria Street, Newcastle-upon-Tyne ... (E) Mar. 1889
Milne, George Murray, 17, East Percy Street, North Shields ... (S) Feb. 1898
Mitchell, William, Glen Street, Hebburn-on-Tyne ... ... (S) Jan. 1898
Moore, Jas. Forster, 6, Princess Street, Sunderland ... ... (E E) Nov. 1897
Moroney, Edward F., 180, Gloucester Road, Newcastle-upon-Tyne (E) Feb. 1892
Moss, William, c/o T. Carr, Esq., Laburnum Avenue, Wallsend-on-Tyne ... ... (E) Jan. 1898
Murray, Athole J., Hassendean, Beech Grove, Newcastle-upon-Tyne ... ... (S) Nov. 1897

N.

Nesfield, Albert C., 30, Hawthorn Terrace, Newcastle-upon-Tyne (E) Nov. 1898
Nesfield, Arthur, 30, Hawthorn Terrace, Newcastle-upon-Tyne ... (E) Nov. 1898
Nixon, John Robert, 4, Bath Terrace, Blyth ... ... (E) Feb. 1898

O.

Olsen, Hans B., Jun., Wellington Road, West Hartlepool... ... (E) Feb. 1895
Owen, Charles E. A., 13, Gloucester Terrace, Newcastle-upon-Tyne (S) Nov. 1898

P.

Parr, Joseph C., 21, Zion Terrace, Newcastle Road, Sunderland ... (E) Nov. 1898
Patterson, Robt. O., Thorneyholme, Blaydon-on-Tyne ... ... (E) Jan. 1895
Pearce, Standen L., Hampden Club, Phœnix Street, London, N.W. (E) Dec. 1893
Pescod, Joseph Hind, 10, Hurworth Road, York Street, Jarrow-on-Tyne... ... ... (S) Feb. 1898
Pierce, Robert Cecil, 4, Simonside Terrace, Heaton, Newcastle-upon-Tyne ... ... (E E) Dec. 1896
Piercy, Guy, 150, Cardigan Terrace, Heaton, Newcastle-upon-Tyne (S) Dec. 1898
Posgate, James Stephen, 11, Wandsworth Road, Heaton, Newcastle-upon-Tyne ... ... (E) Nov. 1895
Potts, Arthur W., 9, Beaconsfield Terrace, Gateshead-on-Tyne ... (E) Oct. 1898
Potts, Joseph, 14, Moreland Street, West Hartlepool ... ... (E) Feb. 1898

R.

Rappoport, Fred. G., 58, Coniston Avenue, Jesmond, Newcastle-upon-Tyne ... ... (E) Mar. 1894
Robinson, Charles O., Ingleside, North Shields ... ... (E) Dec. 1893
Robinson, Francis, Willington Rectory, Newcastle-upon-Tyne ... (E) Nov. 1897
Robinson, Frank Bertie, 10, Dickinson Crescent, Gosforth, Newcastle-upon-Tyne ... ... (E) Mar. 1899
Robson, Robert, 166, Rye Hill, Newcastle-upon-Tyne ... ... (E E) Dec. 1894
Robson, Geo., Jun., 9, Wellington Terrace, South Shields ... ... (E) May 1899

ELECTED.

Routledge, Herbert J., Stapleton House, Jarrow-on-Tyne ... (E E) Mar. 1897
Rowles, Henry P., 8, Belle Vue Terrace, Gateshead-on-Tyne ... (E) Oct. 1896
Ruhaak, G. H. Müller, c/o A. G. Schaeffer, Esq., 16, Lombard Street, Newcastle-upon-Tyne ... ... (E) Feb. 1898

S.

Sanderson, Thomas H., 31, Park Road, Jarrow-on-Tyne ... ... (E) Feb. 1898
Shand, William Lamont, 64, Osborne Road, Newcastle-upon-Tyne (E) Nov. 1895
Smith, Frederick H., Construction Department, Messrs. Elder, Dempster & Co., African House, Water Street, Liverpool (E & S) May 1898
Smith, John E., 15, Eslington Terrace, Newcastle-upon-Tyne ... (E) Nov. 1897
Steele, Wm. S., 4, Scott Street, Byker, Newcastle-upon-Tyne ... (E) Nov. 1898
Stephenson, Robert, c/o Messrs. Robt. Stephenson & Co., Limited, South Street, Newcastle-upon-Tyne ... ... (E) Mar. 1894
Stuart, John, 57, Heaton Park Road, Newcastle-upon-Tyne ... (E) Dec. 1895
Swinburn, M., Fraser Terrace, Heworth, Felling-on-Tyne, R.S.O. on-Tyne ... ... (S) May 1899

T.

Tate, Frank W., 16, Lincoln Street, Gateshead-on-Tyne ... (E) Nov. 1898
Temperley, Nicholas R., 4, Carlton Terrace, Low Fell, Gateshead on-Tyne ... ... (E E) Dec. 1898
Thomas, John P., 11, Poplar Crescent, Gateshead-on-Tyne ... (E) Dec. 1897
Thomas, William, 4, Eton Avenue, Hampstead, London, N.W. ... (E) Oct. 1895
Todd, George William, 126, Bede Burn Road, Jarrow-on-Tyne ... (S) Jan. 1898
Turner, Charles N., 21, Landsdowne Terrace, Gosforth, Newcastle-on-Tyne ... ... (E) April 1896

V.

Varty, B. S., 16, Hawthorn Street, Newcastle-upon-Tyne ... ... (S) Oct. 1895
Vaughan, Wm. A., The Poplars, Gosforth, Newcastle-upon-Tyne... Jan. 1898

W.

Waddingham, W. H., 20, Archbold Terrace, Newcastle-upon-Tyne (E) Nov. 1897
Wailes, William C., 11, Salem Hill, Sunderland ... ... (E) Nov. 1898
Walker, Gavin Knox, Beverley, The Ridgeway, Enfield, London, N. (E) Mar. 1894
Ward, Ebenezer T., 22, Warrington Road, Newcastle-upon-Tyne (E) Mar. 1898
Watson, John, 19, Mundella Terrace, Heaton, Newcastle-upon-Tyne ... ... (S) Dec. 1897
Watson, Kenneth, 3, Rosella Place, North Shields ... ... (E) Mar. 1899
White, Hedley, 3, Glenan Gardens, Helensburgh, N.B. ... ... (S) Nov. 1897
Whittle, J. A., 52, Kenilworth Road, Newcastle-upon-Tyne ... (E) Nov. 1898
Williams, Edward, Bradley Terrace, Walker-on-Tyne ... ... (E) Mar. 1899
Wilson, John R. S., Lyndhurst, Gosforth, Newcastle-upon-Tyne ... (E) Mar. 1894
Wilson, Percy P., 5, Elwin Terrace, Sunderland ... ... (S) Jan. 1896
Wilson, William S., 123, Osborne Road, Newcastle-upon-Tyne ... (E) Nov. 1897
Winstanley, P. G., 6, Joannah Street, Newcastle Road, Sunderland ... ... (S) Oct. 1898
Wood, Lionel, 90, Rothbury Terrace, Heaton, Newcastle-upon-Tyne ... ... (E E) Nov. 1897
Wotherspoon, William L., 13, Bellerby Terrace, West Hartlepool (E) Jan. 1898
ht, George Hudson, 35, Washington Terrace, North Shields... (E E) Feb. 1896

THE NORTH-EAST COAST INSTITUTION

OF

ENGINEERS AND SHIPBUILDERS.

Constitution and Bye-Laws,

ADOPTED AT A GENERAL MEETING ON THE 4TH MARCH, 1885.

REVISED AT THE CLOSING BUSINESS MEETING HELD ON MAY 4TH, 1887.

RE-REVISED AT THE CLOSING BUSINESS MEETINGS HELD ON MAY 9TH, 1888, MAY 13TH, 1889, MAY 11TH, 1891, MAY 14TH, 1895, AND MAY 13TH, 1898.

CONSTITUTION.

I.—The NAME of the Association is "The North-East Coast Institution of Engineers and Shipbuilders." Name.

II.—The OBJECTS for which the Institution is established are :—The advancement of the science and practice of Engineering and Shipbuilding, and the interchange of ideas and information amongst its members, by means of meetings for the reading and discussion of papers relating thereto, and placing on record its transactions. Objects.

III.—The Institution shall consist of Honorary Members, Members, Associates, and Graduates.

IV.—HONORARY MEMBERS shall be such distinguished persons as the Council may elect. Honorary Members.

V.—MEMBERS shall be Principals or Principal Managers engaged in Engineering or Shipbuilding; Civil, Military, or Mining Engineers, or Naval Architects; whose subscription shall be Two Guineas per annum: and other persons engaged in the above professions; whose subscription shall be One Guinea per annum. Members.

VI.—ASSOCIATES shall be such persons as are not strictly Engineers or Shipbuilders, but are connected with or interested in such pursuits, and are deemed by the Council to be eligible for Associate membership. Their subscription shall be One Guinea per annum. Associates.

Graduates.

VII.—GRADUATES may be persons under twenty-four years of age, engaged in study or employment to qualify themselves for any of the above professions. Their subscription shall be Half-a-Guinea per annum.

Life Members and Associates.

VIII.—Any MEMBER may become a LIFE MEMBER by a single payment of Twenty Guineas, or any ASSOCIATE may become a LIFE ASSOCIATE by a single payment of Ten Guineas. All such compositions shall be deemed to be capital moneys of the Institution.

Officers.

IX.—The COUNCIL of the Institution shall be elected from and by the Members, and shall consist of one President, the Past-Presidents, eighteen Vice-Presidents, fifteen Ordinary Members of Council, and an Honorary Treasurer.

Election of Officers. (See Bye-Law No. II.)

X.—The President and Honorary Treasurer shall be elected annually. Three Vice-Presidents and five Ordinary Members of Council shall be elected annually. The retiring Vice-Presidents shall be those who have been in office for the longest period, and Ordinary Members of Council those who have served three years from their last election.

The President shall be eligible for re-election for a second year; should he be re-elected he shall retire at the conclusion of his second year of office, and shall not again be eligible until after an interval of one year.

The retiring Vice-Presidents shall be eligible for re-election. The retiring Ordinary Members of Council shall not be eligible for re-election to the same office until after an interval of one year, but shall be eligible for election to any other office.

The Honorary Treasurer shall be eligible for re-election annually, or for election to any other office.

Honorary Members' Privileges.

XI.—Honorary Members may attend all the General Meetings, they may read papers, take part in discussions, in voting, in moving and supporting resolutions, in presentation of notices of motion, or in requisitions for Special Meetings, and in the proposition of new members; they shall also receive copies of the Transactions.

Members' Privileges.

XII.—Members shall have all the privileges of the Institution as enumerated in the foregoing paragraph, and shall be eligible for office.

Associates' Privileges.

XIII.—Associates shall have all the privileges enumerated in paragraph XI. They shall be eligible for office as Ordinary Members of Council.

XIV.—Graduates may attend all the General Meetings, they may read papers, take part in discussions, and support resolutions; they shall also receive copies of the Transactions, but shall not sign proposals for new members, vote, nor be eligible for office. Graduates Privileges.

XV.—The General Meetings of the Institution shall be held during the months of October to May, inclusive, of each year. General Meetings.

NOTE.—When the word Member is initialled with a capital letter it signifies a member under paragraphs IV. and V., but when initialled with a small letter, it signifies a member of any class of the Institution membership.

BYE-LAWS.

MEMBERSHIP.

1.—Every candidate for admission as a Member, Associate, or Graduate shall be proposed and recommended according to the Form A in the Appendix, in which form the name, usual residence or the place of business, the qualification for, and proposed class of membership of the candidate shall be distinctly specified. Proposals for Graduates must give the date of, and age, last birthday. Candidates for Admission.

The form shall be signed by a Member or Associate of the Institution, as proposer, and by at least other three Members or Associates as supporters, certifying a personal knowledge of the candidate.

The proposal so made shall be submitted to the Council, when, if it be approved, the Chairman shall sign the approbation, which shall be inserted in the notice calling the next General Meeting, when the candidate shall be balloted for, and shall be accepted if three-fourths of the votes are favourable.

2.—Graduates desirous of becoming Members shall be proposed and recommended according to the Form B in the Appendix. Graduates becoming Members.

The proposal so made shall be submitted to the Council, who shall agree to or reject it.

3.—The balloting for membership shall be conducted in the following manner:—Each member shall be supplied by post with a list of the names of the candidates, according to the Form C in the Appendix, and shall strike out the names of such candidates as he desires shall not be elected. These lists may be Balloting for Members.

returned to the Secretary by post, or may be deposited in the ballot-box by the voter in person on entering a meeting at which an election is to take place. The ballot-box will be closed at ten minutes after the advertised time of meeting. The lists shall then be handed over to the Chairman, who shall appoint two Scrutineers to examine them, after which examination the Chairman shall inform the meeting of the result.

Candidates to receive Notice of Election.

4.—Notice of Election as a member shall be sent to the candidate within one week after his election, according to the Form D in the Appendix; but his name shall not be added to the list of Members, Associates, or Graduates of the Institution, until he shall have paid his first annual subscription.

Rejection of Candidates.

5.—In case of rejection of the candidate, no mention thereof shall be made in the minutes, nor shall any notice be given to the unsuccessful candidate.

Subscriptions payable in Advance.

6.—All subscriptions shall be payable in advance, and shall become due on the 1st of August each year. Any Member, Associate, or Graduate, wishing to retire from the Institution shall continue to be liable for his annual subscription until he shall have given formal notice of his retirement to the Secretary, which notice must be given on or before the 31st of August in each year. Application for membership may be made at any time during a Session, and the subscription shall cover the membership up to the 1st of August following.

Receipt of Subscription.

7.—On payment of each subscription the Secretary shall forward to the member an official receipt.

Questions of Privilege.

8.—On question of privilege.—Any person who may be unknown in the meeting shall only be able to claim the privilege in question on proving his membership for the current Session.

Arrears of Subscriptions.

9.—Any member whose subscription is one year in arrear shall be reported to the Council, who shall direct application to be made for it, according to Form E in the Appendix; and in the event of its continuing in arrear until the end of that Session after such application, the Council shall have the power, after remonstrance by letter, according to the Form F in the Appendix, of declaring that the defaulter has ceased to be a member.

Power of Council to remove Name from List of members.

10.—The Council may refuse to continue to receive the subscriptions of any member who shall have wittingly acted in contravention of the Regulations of the Institution, or who shall,

in the opinion of the Council, have been guilty of such conduct as shall have rendered him unfit to continue his membership; and the Council may remove his name from the list of members: and such person shall thereupon cease to be a member of the Institution. Notice of such action of the Council shall be forwarded to the person in question, in accordance with the Form G in the Appendix. The reason for such action of the Council shall not be stated to the person expelled, without the sanction of the Council.

OFFICERS.

Election of Officers.

11.—The Annual Election of Officers shall be conducted in the following manner:—The Council shall meet in March or April, and shall arrange a list of nominations, in accordance with the Form H in the Appendix. It shall nominate new names in the place of the retiring Members, and the number of nominations shall be one in excess of the number required in each section of the Council. Such list shall be presented at the General Meeting immediately preceding the last General Meeting of the Session, and any Member present shall be at liberty to nominate additional Members. The list shall show who remain in office throughout the Council, and who are retiring. A copy of this ballot list shall be forwarded to each Member and Associate, together with a complete list of Members of Council, to be filled in, in accordance with the instructions printed in the ballot form, and to be returned to the Secretary to be opened in the presence of the Council, at a Council Meeting which shall be held in April or May, when the scrutiny and counting shall be carried out by the Council. Any Member in voting shall be at liberty to erase any name or names from the list and substitute the names of any other person or persons eligible for each respective office other than those already placed on the ballot list by the Council and Members of the Institution.

Any voting paper returning either more or less than one President, eighteen Vice-Presidents, one Honorary Treasurer, and fifteen Ordinary Members of Council, shall be disqualified for the section or sections in which such errors occur, and the votes shall be lost for the said section or sections. The votes given as President, to a Member who is not elected President, shall count to him as a Vice-President; the votes given as Vice-President, or Treasurer, to persons not so elected, shall count to

them as Ordinary Members of Council, unless they have just completed a term of office in such capacity.

The voting list shall not be sent to any Member and Associate whose subscriptions are more than one year in arrear; nor shall any such Member be nominated on the list. For this purpose, the Secretary shall prepare, previously to the meeting of Council, a list of those Members whose subscriptions are more than one year in arrears.

Ballot to be declared at May Meeting.

12.—The result of the ballot for Officers shall be declared at the Closing Business Meeting, to be held in May, at which meeting general business shall be transacted. At this meeting the newly-elected Officers, after being declared, shall enter into office; and this shall be the last meeting of the Session.

Power of Council to fill up Casual Vacancy.

13.—The Council shall have power to supply any casual vacancy within itself (including any casual vacancy in the office of President), which shall occur between one May Meeting and another; and the Officers so appointed shall retire when the persons whose places they fill would have retired. Vacancies not filled during the year shall be filled at the General Election.

GENERAL MEETINGS.

General Meetings.

14.—The Annual General Meeting shall take place in October, and the Closing Business Meeting in May; each of these meetings shall be held in Newcastle-upon-Tyne. The Ordinary Meetings shall take place in the second week in each following month during the Session, unless otherwise arranged by the Council, and at such hours and places as the Council may determine.

Notice of Meetings

15.—Seven clear days' notice of every General Meeting, Ordinary or Special, specifying the nature of business to be transacted, shall be given to every member of the Institution.

Special General Meetings.

16.—A Special General Meeting may be convened at any time by the Council, and such meeting shall be convened by the Council whenever such is the declared wish of a General Meeting, or whenever a written requisition, signed by twenty members, specifying the object of the meeting, is left with the Secretary. If, for fourteen days after the delivery of such requisition, a meeting be not convened in accordance therewith, the requisitionists, or any twenty members of the Institution, may convene a Special Meeting in accordance with the requisition. The business discussed at such Special Meetings shall only be that indicated on the notice calling the meeting.

17.—Twenty Members shall constitute a quorum for the purpose of a meeting other than a Special Meeting. Thirty Members shall constitute a quorum for the purpose of a Special Meeting. Quorum

18.—The President shall be chairman at every meeting, and in his absence, one of the Past-Presidents or one of the Vice-Presidents; or in the absence of these, an Ordinary Member of Council shall take the chair; or if no Member of Council be present and willing to take the chair, the meeting shall elect a Chairman. Chairman at Meetings.

19.—The decision of a General Meeting shall be ascertained by a show of hands; or, when five Members or Associates shall demand, or the Chairman may think it desirable, the decision shall be taken by ballot. The manner of counting the votes shall be at the discretion of the Chairman, and an entry in the minutes, signed by the Chairman, shall be deemed sufficient evidence of the decision of a General Meeting. In cases of equality of votes, the Chairman shall have a casting vote; otherwise he shall not vote. Decisions of General Meetings.

20.—Questions of a personal nature arising in a General Meeting, shall, if possible, be referred to the Council, otherwise the decision of the meeting shall be taken by ballot on a motion or amendment put to the meeting. The ballot shall be taken by the voters (being Members or Associates) writing "for" and "against" on a slip of paper. The slips shall be folded and collected, and then counted in the presence of the meeting, and the result announced by the Chairman. Should fewer than twenty votes be given, it shall be understood that the question is shelved, and the votes shall be destroyed without being opened. Questions of a Personal Nature in General Meetings.

21.—At every General Meeting of the Institution, the Secretary shall first read the minutes of the preceding meeting, which, on approval, shall be signed by the Chairman; business arising out of these minutes shall then be transacted. The Secretary shall read any notices which may have to be brought before the meeting. Notices of motion may then be given, and other business of the Institution may be attended to; but when a paper is to be read, the foregoing business shall not be extended beyond half-an-hour after the advertised time for commencing the meeting. The paper or papers for the evening shall then be read and discussed. Transactions of Business General Meetings.

22.—If within half-an-hour after the time fixed for holding a General Meeting a quorum is not present, the meeting shall be Dissolving a General Meeting.

dissolved, and all matters which might, if a quorum had been present, have been done at the meeting so dissolved, may forthwith be done on behalf of the meeting, by the Council; except the reading or discussion of a paper, which shall not proceed in the absence of a quorum.

Adjourning a General Meeting.

23.—Any General Meeting of the Institution may be adjourned by a vote of the Members and Associates present if there be a quorum; if there be not a quorum, the case shall be met by the preceding paragraph.

Introduction of Friends.

24.—Each member shall have the privilege of introducing one friend to the General Meetings, whose name must be written in the Visitors' Book, together with that of the member introducing him; but if the introducing member be unable to attend the meeting, he may send the name of the visitor to the Secretary. During such portions of any of these meetings as may be devoted to any business connected with the management of the Institution, visitors may be requested by the Chairman to withdraw. This shall be done if five Members or Associates, or both, present request it.

COUNCIL MEETINGS.

Council Meetings.

25.—The Council shall meet before each General Meeting, or on other occasions when the President shall deem it necessary; being summoned in either case by circular, stating the time of meeting, and the business, so far as is known.

Convening Meeting for Expenditure of Funds.

No business involving expenditure of the funds of the Institution (except by way of payment of current accounts) shall be transacted at any Council Meeting, unless the circular gives six clear days' notice, and states the business.

Discussions of Personal Character.

All discussions of a personal character in the Council shall be considered and treated as being strictly confidential.

Regulation of Proceedings.

26.—The Council may regulate its own procedure, and delegate any of its powers and discretions to any one or more of its number.

Chairman and Quorum.

The President shall, *ex-officio*, be chairman of all Council Meetings, and in his absence one of the Past-Presidents or one of the Vice-Presidents shall take the chair; or in the absence of these, one of the Ordinary Members of Council shall be elected to take the chair. Five members of Council, including the Chairman, shall form a quorum.

In the appointment of Sub-Committees, the Council shall nine the number which shall form a quorum in each case,

and shall appoint a Chairman. These regulations shall not affect the Finance Committee.

27.—The Council may appoint Committees either from itself, or with the assistance of persons outside, for the purpose of transacting any special business, or of investigating specific objects connected with the work and interests of the Institution. Sub-Committees.

28.—All Committees or Sub-Committees shall be appointed by the Council, and shall be subject to that body, and shall report to it. The Council shall act upon these reports or recommendations as it may think best. The President shall, *ex-officio*, be a member of all Committees. Sub-Committees.

29.—Any member may by communication addressed to the Secretary petition the Council to lay before a General Meeting of the Institution the contents of any letter which shall in a short, concise, and clear manner draw the attention of the Institution to public matters of importance in connection with legislation proposed by any governing body in reference to the construction of ships, machinery, or the working of the same, so that members may by their scientific and practical knowledge demonstrate the soundness or otherwise of the proposed measure. Communication to Council.

30.—The Council may invite to General Meetings or to Council Meetings any person or persons whose presence and assistance it may desire, and strangers so invited shall be permitted to take part in the proceedings, but not to vote. Invitation to Strangers.

31.—The Secretary, who shall also act as Treasurer, shall be appointed by and act under the direction and control of the Council, and shall be paid such salary as the Council shall determine. He shall attend all meetings, Council and General, and shall take minutes of the proceedings, and enter them in proper books provided for the purpose. He shall write the correspondence of the Institution and Council, read minutes and notices at meetings, report discussions, and, if required by the Council, prepare papers for reading and publication, and read papers and communications at the meetings. He shall receive all payments due to the Institution, and shall bank the cash in hand whenever it amounts to ten pounds. The bank shall be determined by the Council and the banking account shall be in the names indicated in connection with the Finance Committee. He shall keep a cash account book, general and detail, which shall on all occasions be open to inspection by the Finance Secretary and Treasurer's Duties.

Committee or by the Council. He shall keep a register of the names of members, so arranged as to distinguish all members whose subscriptions are in arrear. He shall also perform whatever other duties are indicated in the Bye-Laws of the Institution as appertaining to his department; and shall remain in office during the pleasure of the Council. He shall not vote on any resolution.

32.—The following Sub-Committees shall be appointed annually at the first meeting of the Council in each Session:—

Finance Committee.

(1) A Finance Committee, to consist of seven persons, viz.: one Past-President or Vice-President, who shall be Chairman; five Members of Council, and the Honorary Treasurer of the Institution; three of whom shall form a quorum. The Treasurer shall be empowered to pay all amounts due from the Institution which are under two pounds. All amounts of two pounds and upwards shall be paid by cheque, signed by the Chairman of the Finance Committee (or in his absence, by the President or a Past-President), the Secretary and the Honorary Treasurer. (2) A Reading Committee, to consist of six members of Council. No member who has served on this Committee for three years in succession shall be eligible for re-election until after an interval of one year. (3) A Library Committee, in accordance with Library Rules, Nos. 1 and 3. (4) A Graduates' Award Committee to consist of five members.

Payment of Accounts.

Reading and Library Committees.

TRANSACTIONS.

Papers to be submitted to Council.

33.—All papers shall be forwarded to the Secretary at least five clear weeks before the proposed date of reading. The Secretary shall submit them for approval to the Council, and on their general approval they shall be handed to the Reading Sub-Committee, three of whom at least, shall read the paper through. The Reading Sub-Committee shall be at liberty to strike out any parts which, in their opinion, ought not to be read. They may also make any suggestions to the author as to points which might with advantage be inserted or altered. A synopsis of the subject-matter of each paper shall be forwarded to the Secretary, by the writer, for insertion in the circular convening the meeting at which the paper is to be read.

Reading Sub-Committee.

Synopsis of Papers.

Printing Transactions.

34.—The papers read, and the discussions on them, or such portions of them as the Council shall select, shall be printed for

distribution among the members, each of whom shall receive a copy. These Transactions shall be edited by the Secretary, in accordance with instructions of the Council, who shall have power to omit parts of discussion which may be foreign to the subject, or which it may be deemed undesirable to retain. Each paper shall bear the date on which it was read in General Meeting.

Copy of Papers supplied to members before reading, etc.

35.—Copies of papers to be read during any Session will be sent seven days before the date of reading to members who shall have applied to the Secretary for them, in writing, at the commencement of the Session. The discussion on a paper shall not be considered closed on the evening on which it is read, but shall be open for renewal at a subsequent meeting, prior to the reading of the paper set down for that date.

Proofs sent to members for Correction.

36.—The Secretary shall send to each speaker as soon as possible after a General Meeting a copy in manuscript of the speaker's own remarks for correction. This copy must be returned to the Secretary within four days. A printed proof will also be sent to each speaker for further revision; this must be returned to the Secretary within three days, otherwise it will be deemed correct, and printed off after receiving verbal corrections.

Liberty to Print Explanatory Notes.

37.—The Council shall be at liberty to print as Transactions, either with the papers and discussions or separately, explanatory notes, etc., communicated after the reading or discussing of a paper. Such communications must be approved by the Reading Committee, and shall bear the date on which they shall have been received by the Secretary.

Institution not responsible for statements.

38.—The Institution shall not be held responsible for the statements and opinions advanced in any of the papers which may be read, or in the discussions which may take place at the Meetings of the Institution.

Copies of Transactions to be sent to members.

39.—Twenty copies of each paper and discussion shall be presented to the author of the paper, for private use, and one copy shall be sent to each member. When a paper is prepared by two authors, fifteen copies shall be presented to each. Duplicate copies of parts of the Transactions mislaid or lost by members cannot be supplied to them, except as provided for in Bye-Law 42.

Transactions not supplied to members in Arrears.

40.—The Transactions shall not be supplied free to members whose subscriptions are unpaid.

Members not to receive Transactions till after First Payment.

41.—Any member elected at any time between the Annual General Meetings shall be entitled to copies of all the Transactions issued during the Session to which his first subscription applies; but not until the subscription has been paid.

Transactions the Property of the Institution.

42.—The Transactions of the Institution shall be the exclusive property of the Institution, and shall be published only by the authority of the Council. Additional copies of papers required by authors for their private use can only be procured from the Secretary, at prices fixed by the Council from time to time, and these copies must contain the whole of the discussion following the papers, and be bound in the usual cover, with the addition of the following words:—"By permission of the Council," and "Excerpt Minutes of Proceedings." Duplicate volumes and copies of parts of the Transactions, if in print, can also be obtained from the Secretary, and shall be sold only by him, in such manner and at such prices as the Council shall have fixed.

Rule of Discussion.

43.—During a discussion upon any paper, no person shall be at liberty to speak more than once (except by way of explanation), nor for a longer period than ten minutes.

ACCOUNTS, &c.

Accounts.

44.—The Council shall present the yearly accounts (up to the 31st of July preceding) at the Annual General Meeting in October of each year, after they have been audited by a professional Accountant, appointed by the members at the Closing Business Meeting in May.

Trustees.

45.—The capital, stock, and funds of the Institution shall be vested in the names of three Trustees, to be elected from time to time as vacancies occur by the members of the Institution at a General Meeting called for that purpose. All mortgages and other securities shall be taken in the names of such Trustees; and on any new appointment the funds shall vest in the newly-appointed Trustee or Trustees jointly with the continuing or remaining Trustee or Trustees.

Investment of Funds.

46.—The Finance Committee may, with the consent of the Council, invest in the names of the appointed Trustees of the Institution any moneys not immediately required for the purposes of the Institution, in or upon any approved securities.

ALTERATIONS TO CONSTITUTION AND BYE-LAWS.

47.—Alteration in or addition to the Constitution and Bye-Laws may be made only by resolution of the members at the

Closing Business Meeting in May, after notice of the proposed alteration or addition has been announced at the previous General Meeting.

The resolution may be modified by the Council meanwhile, should they so desire; but in this case it shall be read at the Closing Business Meeting in May in its original form before it is proposed in the amended form.

Such resolutions shall be stated in the notice calling the intervening Council Meeting, and also in the notice calling the Closing Business Meeting in May.

Vote by Proxy.

Any member unable to be present at the meeting at which such alterations are to be considered, but who is nevertheless desirous of recording his opinion thereon, shall be allowed to vote by proxy, such proxies shall be in Form J in the Appendix, which may be had on application to the Secretary, and may be used by any member present at the meeting on behalf of the absent member, and counted by the Chairman as of equal value with votes given in the manner provided in Bye-Law 19.

THE GOLD MEDALS.

RULES.

1.—That papers read by members of the Council shall be eligible for the Gold Medals' Award.

2.—That the medals shall be awarded by the vote of the Council given at a meeting of the Council at which the business has been specially noted on the circular convening the meeting, and not by ballot papers previously sent out, as has hitherto been the custom.

3.—That when the Council proceeds to award the medals, authors of papers who are members of the Council shall not be present nor vote at such Council meetings.

4.—If at the meeting convened a quorum of the Council should not be present, or if the Council considers it desirable or cannot agree, the decision of the Council may be deferred and adjourned to a future meeting.

5.—That the medals shall be awarded annually, provided the papers are, in the opinion of the Council, worthy of the award, but not otherwise; and that they be awarded to the authors of the best papers, irrespective of their having previously obtained a gold medal.

APPENDIX TO BYE-LAWS.

FORM A. (BYE-LAW 1.)

Name (in full)
Profession or Occupation and where Employed
Address
being desirous of admission into the North-East Coast Institution of Engineers and Shipbuilders, we, the undersigned, propose and recommend that he shall become*
thereof. We know him to be†
and eligible for the proposed membership.

* A Member, Associate, or Graduate.

† A Principal, Manager, or Draughtsman, etc. See Articles V., VI., and VII. of Constitution.

	FROM PERSONAL KNOWLEDGE.	SECTION OF MEMBERSHIP.
Proposed by	_____	_____
Supported by Three Members or Associates.	_____	_____
	_____	_____
	_____	_____

Dated this day of

(*When a Graduate is proposed the age last birthday should be stated.*)

FORM B. (BYE-LAW 2.)

A. B. [Christian Name, Surname, Occupation, and Address in full] being at present a Graduate of the North-East Coast Institution of Engineers and Shipbuilders, and upwards of twenty-four years of age, and being desirous of becoming a Member of the said Institute, we, the undersigned [Members or Associates], recommend him, from *personal knowledge*, as a person eligible for the proposed Change of membership, because—

(*Here specify distinctly the Qualifications of the Candidate according to the spirit of the Rules of the Institution.*)

Signed _____
_____
_____ } Three [Members or Associates.]

ed this day of 18

FORM C. (BYE-LAW 3.)

BALLOTING PAPER FOR MEMBERSHIP.

The Council having considered the recommendations for Membership of the following gentlemen, present them to be balloted for, viz.:—

Member, Associate, or Graduate.	Occupation.	Address.	Nominated by.	Supported by Three Members or Associates.

Strike out the names of such persons as you desire shall *not* be elected, and forward the list by post to the Secretary, or personally place it in the ballot-box at the Meeting.

FORM D. (BYE-LAW 4.)

Sir,—I am directed to inform you that on the day of you were elected a of the North-East Coast Institution of Engineers and Shipbuilders, but, in conformity with Bye-Law 4, your election cannot be confirmed, nor your name be added to the roll of membership, until you have paid your first annual subscription, the amount of which is £ : : , or, at your option, the Life Composition of £ : : .

Payment may be made to the Treasurer, Mr. _____

Address _____

I am, Sir,

Yours faithfully,

Secretary.

Dated 18

N.B.—In case of a Graduate, strike out "*or, at your option, the Life Composition of* £ : : "

FORM E. (BYE-LAW 9.)

SIR,—I am directed by the Council of the North-East Coast Institution of Engineers and Shipbuilders to draw your attention to Bye-Law 6, and to remind you that the sum of £ of your annual subscriptions remains unpaid, and that you are in consequence in arrear of subscription.

I am also directed to request that you will cause the same to be paid without further delay, otherwise the Council will be under the necessity of exercising their discretion as to using the power vested in them by the Rule above referred to.

I am, Sir,

Yours faithfully,

Secretary.

FORM F. (BYE-LAW 9.)

SIR,—I am directed by the Council of the North-East Coast Institution of Engineers and Shipbuilders to inform you that in consequence of non-payment of your arrears of subscription, and in pursuance of Bye-Law 9, the Council have determined that unless payment of the amount (£) is made previous to the day of next, they will proceed to declare that you have ceased to be a member of the Institution.

But, notwithstanding this declaration, you will remain liable for payment of the arrears due from you.

I am, Sir,

Yours faithfully,

Secretary.

FORM G. (BYE-LAW 10.)

SIR,—I am directed by the Council of the North-East Coast Institution of Engineers and Shipbuilders to inform you that they feel it their duty to advise you to withdraw from the Institution, or otherwise they will be obliged to act in accordance with Bye-Law 9 (or 10, as the case may be).

I am, Sir,

Yours faithfully,

Secretary.

FORM H. (BYE-LAW 11.)

BALLOTING LIST.

PRESIDENT.—ONE NAME only to be returned, or the vote will be lost.

——— President for the current year (eligible for re-election.)*

——— } New Nominations, from whom to select ONE.

VICE-PRESIDENTS.—EIGHTEEN NAMES only to be returned (including the fifteen who remain in office), or the vote will be lost.

——— } Fifteen Vice-Presidents remaining in office. These do not require to be voted for at this election, as their term of service has NOT yet expired.

——— } Three Vice-Presidents retiring, eligible for re-election.

——— } New Nominations, from whom to select THREE.

TREASURER.—ONE NAME only to be returned, or the vote will be lost.

——— Treasurer for the current year, eligible for re-election.

——— } New Nominations, from whom to select ONE.

ORDINARY MEMBERS OF COUNCIL.—FIFTEEN NAMES only to be returned, including the ten who remain in office.

——— } Ten Ordinary Members of Council remaining in office. These do not require to be voted for at this election, as their term of service has NOT yet expired.

——— } Five Ordinary Members of Council retiring, and NOT eligible for re-election.

——— } New Nominations, from whom to select FIVE.

* To be crossed out before issue, when the President is not eligible for re-election.

N.B.—(*a*) The names of those who remain in office will be counted in the total number required without being re-written by the voter.

(*b*) Any list having either MORE or LESS than the required number of names voted for in any section will be disqualified for that section.

(*c*) Votes as President for a person who is not elected will count for him as a Vice-President.

(*d*) Votes as Vice-President, or Treasurer, for persons not so elected, will count for them as Ordinary Members of Council, unless they have just completed a term of office in that capacity.

(*e*) This list, duly filled in, may be returned to the Secretary by post, or handed to him, so as to be on the Council table before the commencement of the scrutiny, which is appointed to take place in the Council Room, at 8 p.m., on 18

(*f*) A copy of this list shall be posted at least Seven Days previous to the Annual Meeting to every Member and Associate, who may erase any name or names from the list and substitute the name or names of any other person or persons eligible for such respective offices, but the number of persons on the list after such erasure or substitution must not exceed the number to be elected to the respective offices.

Secretary.

FORM J. (BYE-LAW 45.)

NORTH-EAST COAST INSTITUTION OF ENGINEERS AND SHIPBUILDERS.

FORM OF PROXY.

FOR VOTES ON ALTERATIONS TO CONSTITUTION OR BYE-LAWS.

I,....., being [an Honorary Member, Member, or Associate] of the above Institution, do hereby appoint Mr..... who is [an Honorary Member, Member, or Associate] of the same Institution, to act as my Proxy, and record my Vote at the General Meeting of the Institution, to be held on the... .....day of ....., 18....., and at any adjournment thereof.

Signature.....

Address.....

.....

.....*Secretary*.

NORTH-EAST COAST INSTITUTION OF ENGINEERS AND SHIPBUILDERS.

Supplementary Bye-Laws Relating to the Graduate Section.

I.—The Graduate Section shall be controlled by the General Bye-Laws of the Institution, and the following Bye-Laws are supplementary to these.

This Section shall be open to all Members of the Institution who are under twenty-six years of age, who shall be at liberty to express their views upon any subject brought before the General Meetings of the Section.

II.—The Officers of the Section shall be elected from and by the Graduates, in accordance with the Form given in the Appendix, and shall consist of one Chairman, one Honorary Secretary, and five Committee-men. The Committee shall have power to select one of its members to act as Assistant Honorary Secretary if required. **Officers by Ballot**

III.—(*a*) The Officers shall be elected annually, and shall all be eligible for re-election until the age limit is reached. **Election of Officers.**

(*b*) Any voting paper returning either more or less than one Chairman, one Honorary Secretary, and five Committee-men shall be disqualified. **Rider to General Bye-Law No. 11.**

IV.—The Annual General Meeting shall take place as early as possible after that of the Institution in the month of October, and the Closing Meeting shall be held prior to the Closing Business Meeting of the Institution in May. **General Meetings.**

V.—A Special General Meeting may be convened at any time by the Committee. The business discussed at such Special Meetings shall only be that indicated on the notice calling the meeting. **Special General Meetings.**

VI.—Nine Members shall constitute a quorum for the purpose of a General Meeting. **Quorum.**

VII —Excursions shall be arranged during the Session as the Committee may find expedient. Any Graduate wishing to intro- **Excursions.**

duce a friend at such excursions must submit the name of his friend to the Committee at least three clear days before the date of the excursion.

Seven clear days' notice of every excursion shall be given to every Member of the Graduate Section.

COMMITTEE MEETINGS.

Committee Meetings.

VIII.—The Committee shall meet at as early a date as possible after the holding of a General Meeting, and on other occasions when the Chairman shall deem it necessary, being summoned in either case by circular, stating the time of meeting and the business so far as is known. All discussions of a personal character in the Committee shall be considered and treated as being strictly confidential.

Four members of Committee, including the Chairman, shall form a quorum.

Duties of Hon. Secretary.

IX.—The Honorary Secretary shall act under the direction and control of the Committee. He shall attend all Meetings, Committee and General, and shall take minutes of the proceedings and enter them in proper books provided for the purpose. He shall write the correspondence of the Graduate Section and Committee (excepting that arranging for excursions, which shall be arranged by the Secretary of the Institution). He shall keep a stamp account book, which on all occasions shall be open to the inspection of the Secretary of the Institution.

PAPERS.

Synopsis of Papers to be read.

X.—The author of a paper shall forward to the Honorary Secretary, at least fourteen days before the date of the reading of the paper, its title and a synopsis of the contents; a copy of the synopsis to be forwarded to every Graduate, together with the notice convening the meeting at which the paper is to be read.

Copies of Papers to be forwarded to the Secretary of the Institution.

XI.—After the reading of a paper a copy must be forwarded to the Secretary of the Institution in time to be placed before the Graduate Awards Committee. This copy, if deemed necessary by the Council, shall become the property of the Institution, and be placed upon the shelves in the Library. These copies, together with any sketches accompanying them, shall be written upon paper of uniform size.

APPENDIX.

GRADUATES' BALLOTING LIST.

CHAIRMAN.

*——— (E)
——— ( ) } Nominations from whom to select ONE.

HON. SECRETARY.

*——— (E)
——— ( ) } Nominations from whom to select ONE.

COMMITTEE.

*——— (S)
*——— (EE)
*——— ( )
——— ( )
——— ( )
——— ( ) } Nominations from whom to select FIVE.

NOTES.

1.—Any list having either more or less than the required number of names will be disqualified.

2.—All voting papers must be returned to the Secretary of the Institution on or before the day of , 18 .

3.—No signature must be put on this paper.

4.—* Signifies a member of the old committee.

5.—(E) Denotes Engineer; (EE) Electrical Engineer; (S) Shipbuilder.

6.—A copy of this list shall be posted, at least fourteen days previous to the Closing Meeting of the Session, to every Graduate, who may erase any name or names from the list and substitute the name or names of any other person or persons eligible for such respective offices, but the number of persons on the list after such erasure or substitution must not exceed the number to be elected to the respective offices.

7.—Votes as Chairman or Hon. Secretary, for persons not so elected, will count for them as members of committee.

THE LIBRARY AND READING ROOM RULES.

Committee.

1.—The Library and Reading Room shall be managed by a Committee, called the Library Committee, who shall have charge of all books, papers, specimens, etc., which may belong to the Institution. It shall consist of five members of the Institution, of whom at least two shall be members of Council.

Property.

2.—The books and other property of the Library shall be vested in the Trustees appointed by the Institution.

Appointment of Committee.

3.—The Library Committee shall be appointed annually, at the first meeting of the Council in each Session. No member who has served on the Committee for three years in succession shall be eligible for re-election until after an interval of one year. The Chairman shall be elected by the Council.

Librarian.

4.—The Secretary of the Institution shall be Librarian, and shall also act as Secretary to the Library Committee. Three members of the Committee shall form a quorum.

Duties of Committee.

5.—The Library Committee shall be responsible for the binding and purchasing of books, periodicals, papers, etc., and for the expending of all money voted by the Council for its use. It shall appoint an attendant who shall act as Assistant Librarian. It shall make Rules for the management of the Library, subject to the approval of the Council, and present an annual report to the first meeting of the Council held after the annual scrutiny of the books referred to in Rule No. 13.

Hours of Opening and Closing, etc.

6.—Except when closed by special order of the Library Committee, or when the Council is sitting, the Library and Reading Room shall be open for consulting, borrowing, or returning books, every week day as follows:—

Monday	From 10 a.m. to 6 p.m., and from 7 p.m. to 9 p.m.
Tuesday	From 10 a.m. to 6 p.m.
Wednesday ...	From 10 a.m. to 6 p.m., and from 7 p.m. to 9 p.m.
Thursday ... ... / Friday	From 10 a.m. to 6 p.m.
Saturday	From 10 a.m. to 1 p.m., and from 3 p.m. to 9 p.m.

The Rooms will be closed on Christmas Day and the day following, New Year's Day and the day following, Good Friday and the day following, Monday and Tuesday in Easter week and Whit week, on Tuesday, Wednesday, Thursday, Friday and Saturday in the Race week of June, and the first Monday in August (being Bank Holiday); also from the second to the fourth Saturday in July of each year, as mentioned in Rule No. 13.

Lending of Books.

7.—Books shall not be lent to any persons except Members, Associates, or Graduates of the Institution, but a person entitled to borrow a book may send a messenger with a signed order for it.

Visitors.

8.—Each member shall be entitled to introduce a friend to the Reading Room, whose name shall be written in the Visitors' Book, together with that of the member introducing him.

Reference Books.

9.—The books marked with an asterisk in the Catalogue shall be kept only for consultation in the Library, and shall not be lent. Pending the preparation of a Catalogue, the Librarian shall be instructed by the Committee as to which books shall be withheld from circulation.

Unbound Books.

No periodicals, magazines, or pamphlets shall be issued for circulation until after they have been bound and added to the Lending Library.

Register of Books Lent, etc.

10.—The Librarian shall keep a register in which he himself or the attendant shall enter the titles of the books lent, the date of lending, the name of the borrower, and the date of the return of the book to the Library. The borrower of the book or the bearer of his order shall initial the entry of such borrowing, and the Librarian or the attendant shall initial the date of the return of the book.

Number Lent to each member.

11.—No person shall bor[illegible]row or [illegible]ve in his possession at one time more than two volumes [illegible]ing to the Library.

Return of Books.

12.—No member shall r[illegible] a book longer than fourteen days, exclu[illegible] the day of i[illegible] He shall be responsible for the [illegible] be [illegible] it be damaged or lost he shall ma[illegible]r loss.

Yearly Inspection of Books.

[illegible]e Library shall be called in [illegible] of books shall be suspended [illegible] of July, inclusive, of each [illegible] by notice to return all [illegible] mentioned.

Fine.

Members failing to comply with this injunction shall pay a fine of two shillings and sixpence.

14.—Members are requested, when in the Reading Room or Library, to contribute to the general comfort by carefully abstaining from loud talking and noise of any kind. Smoking is not permitted in the Library.

Members in Arrears.

15.—Any member being twelve months in arrears with his subscriptions to the Institution shall not be at liberty to use the Library or Reading Room after the commencement of the first Session following.

N.B.—The foregoing Rules may be amended at any time by the Library Committee with the sanction of the Council.

NORTH-EAST COAST INSTITUTION

OF

ENGINEERS AND SHIPBUILDERS.

FIFTEENTH SESSION, 1898–99.

PROCEEDINGS.

FIFTEENTH ANNUAL MEETING OF THE INSTITUTION, HELD IN THE LECTURE HALL OF THE LITERARY AND PHILOSOPHICAL SOCIETY, NEWCASTLE-UPON-TYNE, ON FRIDAY EVENING, 14TH OCTOBER, 1898.

SIR BENJAMIN CHAPMAN BROWNE, D.C.L., J.P., PRESIDENT, IN THE CHAIR.

The SECRETARY read the minutes of the Closing Business Meeting of last session, held in Newcastle-upon-Tyne, on May 13th, which were approved by the members present, and signed by the President.

The ballot for new members having been taken, the President appointed Messrs. R. H. Muir and W. G. Spence to examine the voting papers, and the following gentlemen were declared elected :—

MEMBERS.

Adamson, Lawrence W., Engineer, Eslington Villa, Jesmond Road, Newcastle-upon-Tyne.

Baird, Alexander, Engineer, 9, Delaval Road, Whitley, Northumberland.

Bomphrey, Archibald W., Ship Draughtsman, 35, Storey Square, Barrow-in-Furness.

Borrowman, William Cameron, Wh.Sch., General Manager Central Marine Engine Works, West Hartlepool, Newstead, Grange Road, West Hartlepool.

Nelson, Thomas H., Engineer, 55, Great Tower Street, London, E.C.

Owens, J. Switzer, B.A., Engineer, 66, Elswick Road, Newcastle-upon-Tyne.

Sergent, William John, Superintendent Engineer, 5, Lovaine Place, Newcastle-upon-Tyne.

Smith, C. H., Ship Surveyor, Custom House Chambers, Quayside, Newcastle-upon-Tyne.

Spence, Donald, Ship Draughtsman, c/o Messrs. Palmer's Shipbuilding and Iron Company, Limited, Jarrow-on-Tyne.

Stanley, John T., Engineer Draughtsman, 9, Eversley Place, Heaton, Newcastle-upon-Tyne.

GRADUATES TO MEMBERS.

Barbour, John, Engineer, South View House, South Shields.

Bowden, John, Engineer, Sheriff Mount, Gateshead-on-Tyne.

Burbidge, Alfred H., Engineer, Backwell Rectory, Bristol.

Duckitt, Talbot, Electrical Engineer, 56, Leicester Road, Loughborough.

Forster, Edgar S., Engineer Draughtsman, Grange Villas, Lawford Gardens, Rugby, Warwickshire.

Foster, L. P., Engineer, Trevillis, Liskeard, Cornwall.

Harvey, Herbert Buchanan, Engineer, Roker Villa, Heaton, Newcastle-upon-Tyne.

Hinchliffe, Robert, Ship Draughtsman, 25, Hawthorn Street, Newcastle-upon-Tyne.

Hobbs, Arthur, Engineer Draughtsman, c/o Messrs. Ferranti, Ltd., Hollingwood, Oldham.

Lumley, William, Engineer, 2, Claremont, Gateshead-on-Tyne.

McDonald, William, Engineer, 15, Union Street, West Hartlepool.

Mather, Clifford Basil, Naval Architect, Lesbury House, Lesbury, R.S.O.

Scott, Joseph, Marine Engineer, 49, Leazes Terrace, Newcastle-upon-Tyne.

Sitwell, John K., Engineer, 24, Archbold Terrace, Newcastle-upon-Tyne.

Squire, Charles E., Electrical Engineer, Corporation Electricity Works, Blackpool.

Thomas, Robert G., Electrical Draughtsman, 6, Queen Anne Terrace, Gateshead-on-Tyne.

Vardy, George, Engineer, 188, Helmsley Road, Newcastle-upon-Tyne.

Wilkin, Ernest V., Consulting Engineer, 47, Saint Mary Axe, London, E.C.

Wildridge, Richard, Engineer Draughtsman, Glasgow.

ASSOCIATES.

Douglass, John, Silversmith, 58, Fern Avenue, Jesmond, Newcastle-upon-Tyne.

Forster, George, Lead Works Manager, 8, Warwick Street, Heaton, Newcastle-upon-Tyne.

GRADUATES.

Agar, Alfred, Engineer Draughtsman, 57, Roker Avenue, Sunderland.

Browne, Jun., Benjamin C., Engineer Draughtsman, Westacres, Newcastle-upon-Tyne.

Calvert, E. A., Electrical Engineer, Messrs. Rowland, Barnett & Co., Ltd., Northumberland Street, Newcastle-upon-Tyne.

Carverhill, Edward A., Engineer Draughtsman, 19, Crown Street, Newcastle-upon-Tyne.

Davison, Joseph P., Ship Draughtsman, 107, Clumber Street, Newcastle-upon-Tyne.

Forster, Charles M., Apprentice Engineer, Woodslea, Newcastle-upon-Tyne.

Jobling, Vivian, Apprentice Engineer, Whickham, Swalwell, R.S.O.

Nesfield, Arthur, Apprentice Engineer, 10, Mather Street, Newcastle-upon-Tyne.

Potts, Arthur W., Engineer Draughtsman, 7, Cavendish Terrace, Gateshead-on-Tyne.

Winstanley, P. G., Ship Draughtsman, 6, Joannah Street, Newcastle Road, Sunderland.

THE LATE SIR WILLIAM GRAY.

The PRESIDENT said perhaps it was well that he should now call their attention to the great loss they had had in the lamented death of their Vice-President, Sir William Gray, who was, of course, one of the leaders of industry in the North of England. He need not eulogise one who was so well known to all of them, and who was so respected as a a native of this district as well as from the point of view of their own Institution. In every way they felt they had suffered a very serious loss indeed. It fell to the Council to appoint a successor, and it so happened that the next one on the list was his son-in-law and partner, Mr. G. H. Baines. It was, therefore, quite obvious the right thing to do was to appoint him in the place of Sir William Gray.

The SECRETARY (Mr. Duckitt) submitted the Council's Fourteenth Annual Report and Financial Statement.

The PRESIDENT (Sir Benjamin C. Browne) delivered his Inaugural Address.

COUNCIL REPORT.

(FOURTEENTH SESSION, 1897-98.)

The Council has pleasure in stating that the finances of the Institution are still in a satisfactory condition.

The fourteenth session was opened with a conversazione and ball, given by the President (Col. H. F. Swan, J.P.), on the 14th day of October, 1897, in Newcastle-upon-Tyne, and was attended by a large assemblage of ladies and gentlemen.

During the session the following papers were read and discussed:—

"The Comparison and Construction of Ships' Lines." By Mr. Archibald Hogg.

"The Theory of the Centrifugal Pump and Fan." By Mr. C. H. Innes, M.A.

"Water Ballasting of Steamers." By Mr. Archibald McGlashan.

"Some Considerations in Connection with the Transverse Framing of Ships." By Mr. H. E. J. Camps.

"An Instrument for Gauging the Circularity of Boiler Furnaces and Cylinders." By Mr. T. Messenger.

"Some Points of Interest in the Designing of Cargo Steamers." By Mr. Ardagh E. Long.

"Cylinder Ratios." By Mr. James Andrews.

"The Effects of Different Arrangements of Crank Angles upon the Economy of Quadruple Expansion Engines." By Mr. A. L. Mellanby.

A communication was also received from Mr. George Dykes, of Hamburg, on "A Method of obtaining the necessary Displacement and Centre of Buoyancy of Ships," which is included in the *Transactions*.

Two gold medals were awarded for the engineering papers read before the Institution during the previous (thirteenth) session. One was awarded to Prof. R. L. Weighton for his paper on the "Experimental Engines at the Durham College of Science, with some results from same;" and the other to Mr. R. Wallis for his paper on "Liquid Fuel."

On the occasion of the Institution's visit to West Hartlepool on December 6th, 1897, Messrs. Thos. Richardson & Sons kindly opened their engineering establishment and afforded the members an opportunity of inspecting the complete system of power distribution by means of electrical machinery erected in their works.

The Institution dinner was held in Newcastle-upon-Tyne on the 4th of February, 1898, and was well attended by members and their friends.

The Council having long felt the desirability of increasing the number of Vice-Presidents, with the object of enlisting the sympathies of the

leading gentlemen connected with the shipbuilding and engineering works in the district and giving them a permanent interest in the Institution, proposed that the number be increased from nine to eighteen, and that each should remain on the Council list for a term of six instead of three years as heretofore. This proposal was unanimously agreed to by the general body of members at the Closing Business Meeting of the session, held on May 13th, 1898, and the necessary alterations were made in the Articles of Constitution and Bye-laws of the Institution.

During the ninth session of the Graduate section eight meetings were held, and the attendance showed an increase upon previous sessions.

The session was opened by an address delivered by the Chairman (Mr. C. W. Cairns, B.Sc.) on "Shop Apprenticeship and Training." This was thrown open to discussion, and led to an interesting and animated debate upon the points raised.

The following papers were read and discussed :—

"Notes on American Naval Architecture." By Mr. Robert Hinchliffe.

"Filtering and Heating Feed-water for Marine Boilers." By Mr. A. H. Burbidge.

"Air Pumps of Marine Engines." By Mr. A. B. Binns.

"Pattern Shop and Foundry Practice." By Mr. F. G. Rappaport.

"Pipe Arrangements for Land Boiler Installations." By Mr. T. A. Cunliffe.

One meeting was taken up with a discussion on "Recent Improvements in Machine Tools," the subject being introduced by Mr. B. G. Nichol.

Owing to the unfortunate strike which took place in the engineering trade, two excursions only were undertaken during the session, one to visit the Sunderland Forge and Engineering Works, Sunderland, and the other to the Walker shipyard of Messrs. Sir W. G. Armstrong, Whitworth, & Co., Ltd. The thanks of the Institution are due to the principals and officials of these works for the kindness and courtesy extended to the younger members on both occasions. The thanks of the Institution are also due to Mr. F. Caws for his hospitality extended to them on the occasion of their visit to Sunderland.

The following awards were presented to the authors of papers read before this section during the previous session :—

1.—Books to the value of £4 to Mr. R. J. N. Willcox for his paper on "Evaporation as carried on at the present time on board Vessels of the Mercantile Marine for the purposes of Auxiliary Feed."

2.—Books to the value of £2 10s. to Mr. W. Lumley for his paper on "An Analysis of some Types of Throttling Governors."

3.—Books to the value of £1 1s. to Mr. F. A. Edminson for his paper on "Refrigeration on board Ship."

Mr. R. Hinchliffe has been elected Chairman and Mr. B. G. Nichol Hon. Secretary of this section for the ensuing year.

During the year the following additions have been made to the list of members:—Honorary Member, 1; Life Member, 1; Members, 59; Associates, 10; Graduates, 49; and 21 Graduates have been raised to the rank of Members.

The Council regrets having to record the loss by death of the following:—Vice-President: Sir William Gray. Members: Messrs. W. S. Armstrong, Thomas Brigham, William Dixon, William Douglass, R. B. Hamilton, C. G. Hawkins, W. Menzies, Thomas Mudd, J. M. Nisbet, Arthur Robson, G. Sevenoaks, E. Simpson, and G. A. Strong.

The Institution has also lost by resignations and other causes 46 Members, 6 Associates, and 24 Graduates.

The total number of names now enrolled is as follows:—

Honorary Members	4
Life Members	6
Members	748
Life Associates	2
Associates	126
Graduates	124
Total	1,010

NORTH-EAST COAST INSTITUTION OF

STATEMENT OF RECEIPTS AND PAYMENTS

Receipts.

			£ s. d.	£ s. d.
To Balance from last Account—				
At Bank				208 10 3
„ Subscriptions received for Session 1897-98—				
242 Members at £2 2s.	£508 4 0			
482 Members „ £1 1s.	506 2 0			
125 Associates „ £1 1s.	131 5 0			
128 Graduates „ 10s. 6d.	67 4 0		1,212 15 0	
977				
„ Association of Foremen Engineers and Draughtsmen—				
One year's Subscription			20 0 0	
„ Life Member—Col. H. F. Swan			21 0 0	
„ Subscriptions received in advance			2 2 0	
„ Arrears for Sessions 1894 to 1897—				
5 Members at £2 2s.	£10 10 0			
9 Members „ £1 1s.	9 9 0			
2 Associates „ £1 1s.	2 2 0		22 1 0	1,277 18 0
„ Transactions sold this Session			11 19 10	
„ Copies of Members' Papers supplied			15 16 8	27 16 6
„ Tyne Improvement Commissioners—				
One Year's Interest to 21st June, 1898, on £605, at 3½ per cent.			21 18 6	
Viz.:—Medal Fund	£274 0 0			
Graduates' Award and Life Members' Fund	331 0 0			
Less—Tax			0 14 5	21 4 1
One Year's Interest to 10th July, 1898, on £500, at 3¾ per cent.			18 15 0	
Less—Tax			0 12 6	18 2 6
One year's Interest to 4th May, 1898, on £300, at 3 per cent.			9 0 0	
Less—Tax			0 6 0	8 14 0
				£1,562 5 4

ENGINEERS AND SHIPBUILDERS.

FOR SESSION ENDING 31ST JULY, 1898.

Payments.

	£	s.	d.	£	s.	d.
By Transactions and Papers—						
Lithographing	135	10	6			
Printing and Binding	190	8	2			
				325	18	8
„ Stationery and Circulars	84	13	6			
„ Reporting	21	0	0			
„ Rents—						
Offices	111	4	0			
Lecture Room	6	14	0			
Telephone	8	0	0			
„ Rates, Gas, Electric Light, and Insurance...	31	0	6			
„ Salaries—						
Secretary, Salary	275	0	0			
„ Commission	62	18	0			
Assistant Librarian	35	0	0			
Office Boy	10	0	0			
„ Postages, Stamps, Post Cards, Parcels, etc.	100	11	2			
„ Secretary's Expenses and Allowances to Hall Keepers, etc.	26	9	7			
„ Office Expenses, Coals, Cleaning, etc.	22	14	6			
„ Measured Mile Posts—Rent...	6	6	0			
„ Auditor's Fee	5	5	0			
„ Lantern Expenses	2	15	0			
				809	11	3
„ Library Account—						
New Books	21	3	7			
Bookbinding	11	17	2			
				33	0	9
„ New Furniture and Repairs				24	6	6
„ Gold Medals' Fund—						
Two Gold Medals awarded				11	0	0
„ Graduates' Award Fund—						
Amounts awarded for Papers				7	11	0
„ Balance at Bank				350	17	2
				£1,562	5	4

THE BALANCE SHEET FOR SESSION ENDING 31ST JULY, 1898.

Liabilities.

		£ s. d.	£ s. d.
Gold Medals' Fund—			
Amount at 31st July, 1897 ...	£293 19 10		
Interest on Investment ...	9 12 1		
		303 11 11	
Less—Two Medals awarded		11 0 0	
			292 11 11
Graduates' Award Fund—			
Amount at 31st July, 1897 ...	£223 5 11		
Interest on Investment ...	7 11 3		
		230 17 2	
Less—Awards for Papers		7 11 0	
			223 6 2
Payments by Life Members and Associates—			
Amount at 31st July, 1897		168 0 0	
Add—Life Member this Session ...		21 0 0	
			189 0 0
Subscriptions paid in advance			4 4 0
General Capital			1,762 4 5
			£2,471 6 6

Audited and certified,
R. W. SISSON, F.C.A.

Newcastle-upon-Tyne,
27th September, 1898.

Assets.

		£ s. d.	£ s. d.
Subscriptions in Arrear—			
Session 1896–97		1 1 0	
„ 1897–98		60 18 0	
			61 19 0
Stock of Transactions, valued at			208 10 0
Office and Library Furniture, Safe, etc., as at 31st July, 1897	£139 19 4		
Less—Depreciation ...	14 0 0		
		125 19 4	
Additions this Session		24 6 6	
			150 5 10
Books in Library—			
As at 31st July, 1897 ...	£257 8 3		
Less—Depreciation ...	25 14 6		
		231 13 9	
Additions this Session—			
Purchases		33 0 9	
Books received in exchange for Transactions		30 0 0	
			294 14 6
Tyne Improvement Commissioners—Investment in respect of the following Accounts, viz.:—			
Gold Medals' Fund		274 0 0	
Graduates' Award Fund		215 15 0	
Payments by Life Members and Associates		115 5 0	
General Capital		800 0 0	
			1,405 0 0
Cash—At Bank			350 17 2
			£2,471 6 6

The PRESIDENT moved the adoption of the Report and Financial Statement. There was nothing he need speak about; it was very full, clear, and self-contained.

Mr. WIGHAM RICHARDSON (Past-President) seconded.

The reports were passed *nem. con.*

PRESIDENTIAL ADDRESS.

By Sir BENJAMIN C. BROWNE, D.C.L., President.

[Delivered in Newcastle-upon-Tyne on October 14th, 1898.]

The President—I may say that every President while feeling it a great honour to occupy this position, must feel also that he has in his hands the responsibility for the conduct and honour of the Institution during his time of office, and I think in some ways I may ask for even more consideration than has ever been accorded to previous Presidents, because I believe my case is the first instance where anyone has been chosen as President who had not previously served on the Council and taken a part in the government of the Institution. With the exception of one very short time, for a special purpose, about twelve years ago, I have not had the honour of being on the Council nor taken any active part in the meetings, and for one single reason, which is that for a long time more and more of my attention has been absorbed in the study of one special object. Whatever spare time I have had from my business I have given it to one that made an absorbing claim upon my time, energy, and strength. It is the subject upon which I must address you, because it is one of most importance to you all. However, it is only by a certain amount of straining it can come within the exact scope of the objects of this Institution. I trust, therefore, you will accord me your fullest forbearance while I speak upon a subject which, although most important, is hardly, perhaps, within the ordinary range of topics which come before you here, of course, a presidential address is not like a paper. Some of my predecessors have spoken upon educational subjects; but, at the same time, you all feel they are so important in leading up to scientific subjects, that you would feel that the President was doing right in speaking upon them. I trust, therefore, you will not think I am doing wrong in speaking upon the subject to which I have given so much attention, namely, the relationships of capital and labour. It may be said, if I have such a paper, why not read it before such a body as the Economic Society? Well, because, although they are people theoretically interested in the subject; to *you*, carrying on business in the North of England, the

understanding of these questions is as the breath of your nostrils. It is a vital matter to you, because it is so important that every young engineer, every young shipbuilder, should give serious thoughts to these economic questions, and remember that they are liable, if not properly handled, to shipwreck the best efforts of men of business or men of science. I hope, therefore, you will kindly hear me while I deliver this message, which I feel is as important as anything I can submit to you.

Former Presidents have addressed you on various topics: sometimes on the general state of our trade, and sometimes on some subject of which they happen to have made a special study: you also regularly hear and discuss papers by various of your members, on all that is best and newest in the construction of ships and engines, and from these papers we learn not only what to make and how to make it, but we are also instructed in laying out and managing works, in all that is new in machinery or buildings, and in everything which contributes directly or indirectly to the carrying on of our business. But as it is necessary that every President should speak of that to which he has given very close attention and study, I feel that I must speak to you on the subject to which I have been compelled to devote so much of my time of late years, namely, the human element in our works, or, in other words, to the relationship between the employer and the workmen. I must, therefore, speak of our workmen, of their legitimate hopes and aspirations, of those matters which are liable to cause friction between them and their employers, and the hopes of improvement. Nor do I apologise for this. One of the greatest, if not the greatest problem in the life of an engineer or shipbuilder of to-day is the labour question, and looking at this Institution as a body mainly composed of young men and of men of whom we may expect that the larger proportion will presently either have their own works or be responsible managers of works, I know of nothing more important than for you to form clear views of these questions, not only in the interest of the workmen themselves, but also in the interest of the employers, of the trade, and of the country generally.

Now, to put the matter on a broad footing, you may of course see that a man might be condemned as an unsatisfactory manager if he failed in any one of a great number of particulars; but whereas, with regard to all the mechanical part of his business, and even with regard to the commercial element, he can see a distinct line of training whereby he may know whether he is or is not qualified to undertake a certain

position, and may compare his experience and powers with those of other men, yet with regard to the tact, judgment, and experience required for the management of his fellow creatures, there is no such training, and no such test.

We often hear of a manager who has had to give up his position because, we are told, he could not manage his workmen—could not get on with those about him—or because he was always offending the customers; and, surely, it is worth while to give some thought and study in order that we may qualify ourselves for these duties, without which a manufacturer and his staff will never be able to achieve any practical success.

The whole question of the relationship between employers and workmen is complicated by a great deal of feeling, which is unfortunate and unnecessary When we consider the enormous number of workmen that are employed, each man with his own interests, his own difficulties, and the possibilities of misunderstanding, we see how very easy it is for friction to arise, and I sometimes question whether any transactions between man and man are, on the whole, carried on more smoothly than those between employers and workmen; even our great strikes, enormous as they are, bear a very small proportion to the large numbers of men in the country who are working peaceably and quietly; and when you think how often people quarrel with their neighbours, and sometimes with their customers, I think you will see that the position that I indicate is, to say the least of it, not untenable.

And furthermore, I am disposed to think that the strong feeling is not brought in so much by the workmen themselves as by well-intentioned but generally ill-informed outsiders; and while I fully recognise the excellence of their motives, I think it a pity that our disputes are sometimes intensified by the words of irresponsible people, who think that they are capable of deciding on questions about which an old employer of labour or a trades union leader of life-long standing would pause and think over very carefully before he gave an opinion.

On one of the commonest class of questions discussed, namely, wages questions, you will all find that before you can eventually give an opinion on the merits of any case you must be sure that you very thoroughly understand the whole condition of the industry, the state of the order book, and many other subjects which are rarely known except to those engaged in the trade.

But those who are not engaged in the trade may study these questions or leave them alone as they please, or may keep what is called

an open mind: but we have to face disputes and difficulties the moment they arise—they will not wait for our convenience, and we must be prepared to try and settle all points of friction that arise in our works without delay or hesitation. Probably much the larger proportion of questions are so settled. Some of the cases may be referred to an employers' association, a few of them may develop into strikes, and one here and there becomes a matter of national magnitude. But as you can only settle difficult technical questions quickly and without delay by having a mind trained in sound scientific principles, so you can only settle disputes between an employer and workmen by having carefully studied the broad principles that ought to underlie the employment of labour in such industries as ours.

I observe that many of those who broadly sympathise with the employers rather than with the workmen, talk as if all our disputes and labour troubles were owing to the existence of trade unions. But this idea has lost ground very much of late years. At the time of the late eight hours' strike, when a great cry was raised that the object of the employers was to smash the unions, our president, the late Col. Dyer, kept to the front, both by statement and evidence, the fact that the employers had no such intention, and the working classes as a whole, and those unions that were not actually interested in the dispute, never showed much anxiety on that point, which they certainly would have done if they thought that the intention of the employers was to make an attack on the existence of trade unions.

Discussion and free expression of views on these questions used to be deprecated on the ground that it would never do to let the world know that employers held views different one from another. Very probably many workmen also felt that they also had better not let their divergencies of opinion be seen. But this principle is unsound, both for them and us, and is inimical to all effort to take enlightened and intelligent views of these questions, and only conduces to enforcing an unreasoning and narrow-minded tyranny on the minds alike of employers and workmen. No one can seriously believe that all the employers in 700 works (still less that 100,000 workmen) can all think exactly the same on every point, and it was silly to pretend that the impossible was a fact. And where there is a great amount of unanimity, as among the employers in the late engineers' strike, the more each individual is encouraged to express his personal views frankly the more clear the strength of the whole body of opinion will really appear to any thoughtful person. In politics most men act with their

parties, and yet no one supposes that there are only two classes of thought on political questions; and so it is in labour disputes. Let us express our opinions freely and frankly, and then let the united body act on the resultant of those opinions, both as to direction and force. We all give and take, and sink our own views in the average view of the body to which we belong.

Now, to revert to the idea that there would be no labour difficulties if there were no trade unions. I think this view is wrong. We are apt to fix our eyes on some earnest, self-reliant workman, who thinks out every question for himself, and rises in the world by his own exertions, and we say, "Oh, if there were no unions, and all men were like that, how much better it would be!" But what ground have we for thinking that if there were no unions all men would be like that? I think all our knowledge, and all our experience, goes to show that at all times, and in all countries, among men and women of all classes, the natural tendency of most people is to take conventional views, or, in other words, to adopt each other's thoughts; to lean on each other, and, above all, to select some one, or some few stronger natures, to guide them, preferring to be led and to obey rather than to think things out for th mselves and act on their own responsibility. Conventional customs, conventional wages and hours exist where there are no unions, and in case of dissatisfaction a number of men, hitherto disunited, are liable at any time to hold a mass meeting, guided by impulse, elect the most plausible or violent men as their leaders, and make demands of an extreme character, such as the leaders of an experienced union would never adopt; and, worst of all, if an employer comes to a compromise with these ephemeral authorities, there is no safeguard that the men will not throw their leaders over and adhere to their old terms, or demand something worse. Personally, I think we are safer in dealing with wise and experienced union leaders.

But, you may ask, am I not begging the question by assuming that the unions and their leaders will be wise and experienced. Quite true, we have unions and union leaders of both sorts. There are those who, while making the best bargains they can for their clients, still recognise that the employer has his rights, and that trade is a delicate plant that may be injured if care is not taken. You can all at once recall the names of many leaders of the men who try to meet the employers in a fair and friendly spirit, and who often succeed in checking unreasonable demands on the part of their men. I don't mean to say that all their demands or positions are right, in fact they differ one from another; for

example, you all know that some trades object to piece-work and others object to anything else. But as long as they try to act fairly, and recognise the interests of others as well as of themselves, it is possible to discuss amicably and compromise honourably. There is, however, another view of the question.

Some seven or ten years ago a new force came to the front which called itself new unionism. Despising the good work and experience of men who, as union leaders, had earned the respect of people of all shades of opinion and of all classes, they advocated extreme demands, and some of them actually taught in many cases that employer and workmen were natural enemies, and that there could be, and ought to be, nothing but distrust and hatred between the two.

Happily, I believe this wicked nonsense has never taken a deep hold of the bulk of the working classes; but if so, it is not the fault of the advocates of such views. All I wish to point out to you is that unless we, as employers, really wish well to our workmen, and they to us, and both of us recognise our duty to each other and to the trade of the country, it is very little use trying to establish amicable relations or to arrive at any settlement likely to be mutually beneficial; and I think we may say that all the sensible and experienced leaders of the workmen fully recognise this.

I now would say something as to the classes of demands that we receive from our workmen and the causes of friction; and, for simplicity's sake, I will try and classify them under four heads:—

1st. Demands which benefit the workmen and are also beneficial or not injurious to the employer.

2nd. Demands which are beneficial to the workmen, and which, at a greater or less sacrifice, the employers can afford to give.

3rd. Demands which are beneficial to the workmen, but which the employers cannot afford to give, either on account of his own interests or on account of the trade.

4th. Demands which are not really beneficial even to the workmen.

As examples of a benefit to the workmen and also to the employers come changes which are troublesome to make, but which afterwards repay the trouble. Personally, I think the weekly wages movement was a case of this. Speaking generally, I think that a workman's income goes further if he is paid every week, and if so, weekly pays will make our service more valuable and attractive, while the extra trouble and cost is not very serious.

Under this head I myself am disposed to class a reasonable restriction of overtime.

It is a point on which the opinions of employers are divided, but, personally, I favour a restriction of systematic overtime. I believe that to keep men on every evening till they are tired out, and perhaps all night on Friday night, is bad for their health, demoralising, and most wasteful. The men cannot give such valuable work, and the chances of accidents are much increased. Of course emergencies will happen when tremendous and special efforts are required, and everyone ought to be ready and willing in such cases to do their utmost. An occasional hard spurt will not hurt anyone; it is the systematic strain that is bad. Also, whenever a man is hard up or wants money, the temptation to increase his income by working overtime is very great, and it seems such an easy way out of his trouble; but it may be bad for him all the same. When the leaders of the men on the North-East Coast, in 1891, first tried to restrict overtime, they got the employers to agree to rules which were too tight and too inelastic; consequently the men themselves soon tired of them, and the employers found them injurious and sometimes intolerable, and in 1896 they were abolished. In legislating down an old and ingrained custom it is wise to fix the restriction so that it will only stop the very worst cases. Then, the majority of the men not being affected, you have the public opinion of the shops on your side, and you really do something to limit and reduce the evil. I hope it may prove that the present agreed rule of 40 hours' overtime in four weeks will prove a benefit to both the workmen and the employers. Personally, I think it will, though of course I may be wrong.

As regards the second point—a demand which is beneficial to the workmen and which, at a sacrifice, the employer can afford to give—an obvious example is a reasonable increase of wages, while a higher demand for wages would come under the third head, of what the employer cannot afford to give. It is no benefit to anyone if the employer is too severely fleeced. Our ever-increasing population requires for its support ever-increasing industries, and if the return on capital is not enough to tempt employers to increase their works, or start new ones, it is a bad look out for the future. Still worse is it, if prices have to be raised so as to diminish trade.

As regards the fourth head, or demands which are good for neither employer nor workman, a number of the recent points in dispute come, in my opinion, under this head. To some of these I must briefly refer, and you can judge of them for yourselves.

First and foremost came the recent demand which, stated roughly, was that all the engineering shops in London should only work eight

hours per day. Now, it was one thing for repair shops and shops that worked for London and had no competition with anyone outside to give the eight hours, and quite another thing for those works, such as large Admiralty contractors, who had to compete with the Tyne, the Clyde, and other places, to give what would hopelessly handicap them. Personally, I don't think the case for eight hours was made out for any of the works; but certainly it would have been ruin to such trades as I have mentioned. However, I will not now discuss this, the more as many of us published our views at great length during the struggle. Hours of labour, however, are perhaps just one of those things that probably could be better dealt with if we had no unions either of employers or workmen, for one firm might be able to do what another could not, and, at any rate, experiments could be tried.

But what really, in the eyes of the employers, had paved the way for, and led up to, the great struggle, was the claim to interference in the management of the works. We held it to be essential to success that the management of any works must be in one hand, and be guided by one who knows all the conditions, needs, and capabilities both of the business of our customers and of our rivals. This is no assertion of superiority. The workmen may be good and wise, but they have not seen the correspondence; they have no touch with the customers; and, above all, they are not, what employers essentially ought to be, men who devote their lives to the study of the general interests and conditions of the trade. Anything that would injure the trade would injure the men equally with us. On board a steamer we forbid the passengers, even in their own interest, to interfere with the man at the wheel, and in managing a business the wheel is, and must be, in the hand of the employer, or, to speak more precisely, in the hand of the man who takes, and is responsible for, the execution of the orders.

Then, to pass on to other points. If in America one man looks after half-a-dozen little machines, we in England cannot compete if we put one man on each machine; nor should we be bound to put a skilled mechanic to a job that can be perfectly well done by a labourer. Some employers are said to press both these and some other points too far; but, if so, they will soon find it out by the work becoming inferior in quality, or too costly.

Again, we say that in the interests of the next generation, as well as of the trade, there should be no limit to apprentices, but that every lad ought to be allowed to learn some honourable trade for his support.

Another class of dispute is limits of demarcation. Is it right that if

a pipe is 3 inches diameter a plumber must screw it, and if ¼ inch larger he must not, but an engineer must be called in? Clearly there is a margin where both men are equally competent. No one wants to put on an engineer to solder a lead pipe, or a plumber to fit up a valve motion; but where both men are equally competent the employer ought to be entitled to employ either. In ship work these limits are an intolerable nuisance, and I have no hesitation in saying that they are without sense or justification, and are to the interest of nobody. The proper guide would be that a workman should be willing to do whatever can be done with the regular tools of his trade. Thus, either an engineer or a boilermaker may cut a hole in a plate, but an engineer should not, as a rule, be asked to work on hot iron, because he has not been trained to it.

I must, however, pass on to speak of that state of things that arises when, unhappily, workmen and employers cannot agree, and war is declared—say in one factory the men of one trade strike; their union, if it approves their action, supports them. The loss to the men is spread over a wide area, and is easily borne. The employer feels that he alone cannot compete with the whole resources of the trade union, so he appeals to his co-employers. They may help him in three ways: either by negotiation, in which their greater weight and influence may tell; or they may add to the burden and diminish the resources of the trade union by locking out all the members; or they may subsidise and give him such money compensation as may make him content to stand out. In the case of a lock-out, if large enough, the pressure on the men becomes very great; in the case of subsidy the union may be expected to get tired of letting its funds bleed away, if the only employer affected is quite happy. I must say I hope that as time goes on we shall more often see our way to adopt subsidising instead of locking out, for however highly we may estimate the loss caused by a strike in a single works, the cost to other employers of reimbursing that amount by subsidy is very small indeed.

This brings me to saying something as to the cost of strikes and locks-out. Some extraordinary figures have been given as to what the late eight hours strike cost the employers, but I will rather try and lead you into the way of making estimates for yourselves of the cost of these things. First, what does a strike or lock-out cost the men and their friends? After much thought you will probably come to the conclusion that it really costs just the amount of wages not earned by the men who are on strike or who are laid idle on account of the strike. If the trade

unions allow the men so much per week, that means that the union shares the loss; but it neither increases nor diminishes the loss by a penny. So if other friends subscribe it makes it easier for the men on strike to hold out, but the loss (as I put it) to the men and their friends remains unaltered. So if 40,000 men are laid idle for 30 weeks, and their average earnings are 30s. per week, the cost for the 40,000 men is £60,000 per week, and the cost for 30 weeks is £1,800,000.

Then come two losses which I cannot estimate: one is the permanent loss to the trade of the country by directing that trade elsewhere. I think this is serious, and it is equally a loss to workmen and employers; a curse to both, a blessing to neither.

Next comes the loss to customers. A manufacturer who cannot get his steam engine, a shipowner who cannot get his ship to sea, anyone who cannot get his repairs executed, loses heavily. I am sure that these losses, in the aggregate, are greater than those of either of the contending parties. There again both sides are responsible, and the loss in the long run falls as much on one side as on the other.

Finally comes the direct loss to the employer. While a strike lasts this is difficult to estimate, but if any of us look back on strikes that happened, say two or more years ago, when all matters are things of the past, and all difficulties connected with them are at an end, it is not very difficult to make a rough estimate; and, as I have estimated the loss to the workmen as equal to the wages that would have been paid and are not, so (always in both cases including, for financial calculating, with the men on strike, those who are laid off on account of the strike) I reckon that the cost to the employer of his works standing idle, of interest on dormant capital, salaries of officials who must be retained, rent, rates, and all the other things we include under the heads of working charges, is about one-half of the cost to the men. The permanent loss to an employer of connection is not often very great, unless in the case of an already decaying trade; but, to include that also, I think a liberal overhead estimate of the cost to the employer would be £1 per week per man for all the men on strike or laid off on account of the strike. Isolated cases may show special results, and here and there, owing to some special circumstance, a special loss may be incurred, but, broadly speaking, I have no doubt that any strike or lock-out costs the workmen and their friends at least 50 per cent. more than it costs the employers and their friends, if not double. In the last strike, and as a general rule in engineering and shipbuilding disputes, the amounts paid in subsidies have been very small indeed, but in some trades, and in some cases, the

system has been carried out very completely. Until recently there was a widespread dislike to combined action amongst employers. Thirty years ago there was very little of it, and it has increased gradually; and quite recently, stimulated, as I think, by the irritating attacks of socialism, it has grown rapidly. If employers wish for it, there would now be no serious difficulty in uniting all classes of employers for mutual support. Whether it would be an ideal state of things for the industrial world to be dominated by a union of capitalists is another question, but, to my mind, it is simply a question of outside pressure. Trade union aggression and socialistic legislation have forced capitalists to combine, and if these forces became less powerful or less active, so far from capital becoming stronger, I believe our natural love of liberty would assert itself, and the bonds that bind employers together would rapidly slacken and become weaker.

When I said I thought we got on better when our men were in well-governed unions, I was speaking of things as they are. I can well imagine a different state of things where unions would be superfluous. Why is there this constant hostility between an employer and his workmen? We are indispensable to each other; we have our greatest interests in common, and, if we take a broad view of things, it is absolutely certain that it is a great advantage to workmen for their employer to be rich and powerful; and I should say it was quite as much to the interest of the employer for his men to be comfortable, prosperous, and, above all, secure in their employment and free from anxiety about the future; and if a manager can be, as he almost always is, identified heart and soul with the interests of his employer, why cannot a workman be the same, and whose fault is it that he is not?

If time allowed, I could enlarge on the causes that have put us on a wrong footing, but I will merely indicate one direction in which I have always thought we might rise towards better things.

There is no doubt the great evil of our large industrial organizations is the loss of personal touch between employer and workman. It is both true and creditable that the more people know of each other the more they respect and like each other; but I will merely now, in conclusion, refer to one (perhaps one of many) means of narrowing the gulf between employers and employed, and that is by workmen becoming shareholders in the works that employ them.

In the South Metropolitan Gas Company, Mr. Livesey has not only, within a few years, induced his workmen to invest savings to the amount of some £50,000 in the shares of the company, but also holds out hopes very soon of electing a working man director on the Board.

To apply this to our own cases. We may say that for every workman employed in our trades there is about £150 of capital invested, and as the average wages paid (taking men, boys and labourers) is about 30s. per week for 50 weeks, it means that the capital required per man is about two years' wages—much the same as it costs a man to buy his house. Now, it is not very difficult to see that if any man saved up 10 per cent. of his wages for 14 years, and could invest the money at 5 per cent. compound interest, he would then have a sum equal to two years' wages, or, as I have said, to the capital that employs him. If only a few of our men would do this it would be a step towards identifying our interests, and, besides that, the educational value of an investment is very great. If you put money into something, and it is wonderful how quickly you will learn about it, and get rid of any unsound views you may have previously held. The workman-shareholder would be a connecting link between the capitalist and the workman, and if the workmen held a large enough interest, a share in the management must follow.

What England has gained by having made her railways out of the savings of the middle classes is simply incredible. That gave the class such a training as enabled us to take the lead in railway construction and all sorts of other public works all over the world; and what the middle classes did for the carrying trade of the world, I should like to see the working classes undertake for the manufacturing trade. I know that many, if not most, employers would heartily welcome workmen as shareholders.

Meantime, we want, if possible, to establish a greater measure of confidence and sympathy between our workmen and ourselves. Our duty clearly is to give the sympathy and deserve the confidence.

VOTE OF THANKS.

Mr. Wm. Boyd (Past-President) said it had been suggested that he should be the mouthpiece of those present that night in proposing a vote of thanks to Sir Benjamin Browne for the very interesting address he had given them from the chair that evening. He had very great pleasure, so far as lay in his power, in complying with that request. He ventured to think that his friend somewhat underrated his own abilities to prepare what might be called a "scientific" address, because, if he might be allowed to differ from him, his capacities in that respect were

fully equal to that of any of his predecessors. At any rate, with all humility, he ventured to speak for one of them. But Sir Benjamin's well-known acquaintance with, and interest in, the subject which he had brought before them that night, had not unnaturally led him into topics which he very frankly and honestly told them at the beginning of his address were somewhat foreign to the subjects they had hitherto treated at this Institution. He knew Sir Benjamin would excuse him if he said that personally he did feel that to some extent this was the case; but Sir Benjamin had put his reasons before them so strongly, and they all felt that the subject which he had treated of that night was one which he had made so specially his own, and with which he was so closely identified, that he felt that notwithstanding that the President might have diverged somewhat from the path that had hitherto been followed by his predecessors, they could only record their thanks to him for the very interesting address which he had given to them that night. The subject, of course, bristled with difficulties and bristled with controversial points, and perhaps, in following the course that had been followed on most occasions in the Presidential addresses, it would be wise, and, he dared say, agreeable to Sir Benjamin, if they were to refrain from much discussion. He took it that the President had written this paper from, if he might call it, an educational point of view. He knew that Sir Benjamin felt very strongly on these points which had been put before them that night, and there was no doubt to all of them—who, like the members of this Institution, were more or less connected with manufacturing establishments—these subjects were of supreme importance and deserving of their supreme attention. He looked upon this paper not so much as one to be discussed in a haphazard manner by those who had heard it read for the first time; but as an address put before them by one who had given the subject very great consideration and very great study, and who offered to them, the members of this Institution, certain aspects of the subject for their careful study and consideration as far as it affected their daily work. He should not say any more; but he had very great pleasure in moving a vote of thanks to Sir Benjamin for his most interesting address, and he trusted that he would preside over many most successful meetings of this Institution.

Mr. Wigham Richardson (Past-President) had great pleasure in seconding the motion of thanks moved by the first President of the Institution, his friend Mr. Boyd, and he was glad to notice from the way they received his remarks, that the paper their new President had

submitted to them that evening had been so favourably received. Sir Benjamin was a many-sided man, and he entirely agreed with Mr. Boyd in saying that, at any rate compared with some of them, they might have received instruction in more than one branch of engineering from him, and especially in that in which Sir Benjamin was educated, and that was a very large branch indeed; he referred to civil engineering. In this branch they had fewer papers than they would like; but putting this aside, there was not the slightest doubt that the question as treated that night was one of supreme importance, and of ever-increasing importance, and the more scientifically it could be treated, the more likely were they to come to a satisfactory solution. Seeing that they were at present one of the greatest, if not the greatest industrial centre in the world, everything hinged upon the proper feeling of the different grades of the great army engaged in this great work. Recognising this, the more it will be seen how supremely important it was to endeavour in every way to maintain discipline and good feeling in the ranks. He was very pleased with the remarks about his friend, Mr. George Livesey, and he agreed with their President, that if Mr. Livesey's system were allowed to grow of its own accord, not to grow too fast, and these schemes of profit-sharing were divested of all philanthropic bias, and put on a pure business footing, they might expect in time, perhaps not in his time, very great results. At any rate, he (Mr. Richardson) was pleased to notice when he went to investigate its working some time ago, that Mr. George Livesey, who himself fought a very arduous battle against the Gas Workers' Union, and who spent a very large sum of money in fighting it, was on such a footing with his workmen that he was always called "George," he was not even called "Mr. George," only "George." That was the footing on which Mr. Livesey stood with his men, and which they might hope to see their President standing with his workmen. No one would, he was sure, be better pleased than the President to hear himself called by his men not Sir Benjamin Browne, but simply Benjamin.

Mr. J. R. Fothergill (Vice-President) said he had been asked to support the vote of thanks proposed and seconded to the President for his address. He wished to say that he concurred with every word uttered by their Past-President (Mr. Boyd). As it had been usual in the past for the President to refer more especially to scientific subjects, he was very pleased Sir Benjamin had thought it right and proper to precede his address by the remarks he had made. He thought Mr.

Boyd had used a very happy expression in saying the subject of the address was so ably treated and so well considered by Sir Benjamin that they might look upon it as a scientific address. If he might venture to express his own feelings he should say the address was most admirably expressed without prejudice or bias, and the important points in relation to capital and labour clearly and thoughtfully put. He hoped Sir Benjamin during his time in office might realise very fully he had been appreciated throughout, and receive the courtesy of the members of this Institution in every way, so that he might be able to look back upon the occupation of the presidential chair as something worthy of remembrance.

Mr. W. Boyd put the vote to the meeting, and it was adopted by acclamation.

The President thanked the members for the kind vote they had given. He hoped he might take it as an expression that if he had in any way departed somewhat from the custom of the Institution they had pardoned that transgression. One thing they knew, if he had done wrong he did not suppose he should ever do it again. Suppose he found himself in the same position again, he believed it would be customary for him to try to entertain them in some manner as distinguished for its frivolity as this had been for its serious character. He was pleased that Mr. Boyd proposed this vote of thanks, because he remembered many years ago he wrote him a letter saying that as he had more time than many of them he should devote it to the study of labour questions.

The meeting then terminated.

NORTH-EAST COAST INSTITUTION OF ENGINEERS AND SHIPBUILDERS.

FIFTEENTH SESSION, 1898–99.

PROCEEDINGS.

SECOND GENERAL MEETING OF THE SESSION, HELD IN THE LECTURE HALL OF THE LITERARY AND PHILOSOPHICAL SOCIETY, NEWCASTLE-UPON-TYNE, ON FRIDAY EVENING, 18TH NOVEMBER, 1898.

SIR BENJAMIN CHAPMAN BROWNE, D.C.L., J.P., PRESIDENT, IN THE CHAIR.

The SECRETARY read the minutes of the last General Meeting, held in Newcastle-upon-Tyne, on October 14th, which were approved by the members present, and signed by the President.

The ballot for new members having been taken, the President appointed Messrs. J. R. Fothergill and A. G. Schaeffer to examine the voting papers, and the following gentlemen were declared elected :—

MEMBERS.

Allan, George J., Marine Engineer, 20, Villa Place, Newcastle-upon-Tyne.
Atkinson, George H., Engineer, 3, Acclom Street, Hartlepool.
Bailey, James N., Engineer Draughtsman, 3, South Avenue, Ryton-on-Tyne.
Bell, William T., Engineer Draughtsman, 175, Coatsworth Road, Gateshead-on-Tyne.
Blow, Charles, Engineer, 104, Meldon Terrace, Heaton, Newcastle-upon-Tyne.
Burney, Charles E., Ship Surveyor, Norfolk House, York Road, West Hartlepool.
Kyle, Norman M. W., Engineer, 26, Sandhill, Newcastle-upon-Tyne.
Mather, Thomas Brewer, Civil Engineer, 37, Percy Road, Whitley, near Newcastle-upon-Tyne.
Mathieson, Donald, Engineer, 10, Gibson Terrace, Sunderland.
Niven, William A., Engineer Draughtsman, 32, Eighth Avenue, Heaton, Newcastle-upon-Tyne.
Ortton, Alfred R., Ship Draughtsman, 27, General Graham Street, Chester Road, Sunderland.
Stoddart, A. Lane, Ship Draughtsman, 6, Ashfield Terrace, Heworth Village, Felling, R.S.O.

Turnbull, John, Engineer Draughtsman, Bank House, Norfold, Sunderland.
Walker, James, Engineer, Bewick Street, Newcastle-upon-Tyne.
Ward, Herbert John, Ship Surveyor, Lenox, Mosley Hill, Liverpool.
Wass, Archibald D., Engineer Draughtsman, 148, Cardigan Terrace, Heaton, Newcastle-upon-Tyne.
Wyse, Thomas, Draughtsman, 25, Albert Drive, Low Fell, Gateshead-on-Tyne.

GRADUATE TO MEMBER.

Reid, John Robert, Engineer, 88, Leslie Terrace, Aberdeen.

ASSOCIATE.

Potts, Turnbull, Marine Surveyor, Tyne Dock, South Shields.

GRADUATES.

Archer, J. Snowdon, Electrical Engineer, 3, Burnside, Newcastle-upon-Tyne.
Hills, Lawrence, Ship Draughtsman, 2, Somerset Terrace, East Boldon, Newcastle-upon-Tyne.
Nesfield, Albert C., Engineer, 10, Mather Street, Newcastle-upon-Tyne.
Owen, Charles E. A., Draughtsman, 13, Gloucester Terrace, Newcastle-upon-Tyne.
Parr, Joseph C., Ship Draughtsman, 21, Zion Terrace, Newcastle Road, Sunderland.
Steele, Wm. S., Engineer Draughtsman, 4, Scott Street, Byker, Newcastle-upon-Tyne.
Tate, Frank W., Engineer, 16, Lincoln Street, Gateshead-on-Tyne.
Wailes, William C., Engineer Draughtsman, 11, Salem Hill, Sunderland.
Whittle, J. A., Engineer Draughtsman, 52, Kenilworth Road, Newcastle-upon-Tyne.

Mr. M. W. Aisbitt read a paper "On Some Features of the Repairs and Construction of Iron and Steel Ships."

ON SOME FEATURES OF THE REPAIRS AND CONSTRUCTION OF IRON AND STEEL SHIPS.

By M. W. AISBITT, M.I.N.A., M.I.M.E.

[Read before the Institution, in Newcastle-upon-Tyne, on Friday, November 18th, 1898.]

In venturing to lay before the members of this Institution his ideas, the writer desires it to be understood that, although originally engaged as a shipbuilder, it has been his duty for some considerable time past to devote his attention more particularly to the repairing of all classes of vessels.

Looking back over the last twenty-four years, and even beyond that, all must be struck with the fact that the progress in the designing and building of iron and steel ships has advanced so rapidly that it is almost beyond one's capacity to have kept pace with the new ideas and improvements which have taken place, unless he has been in constant touch with their construction. However, the writer hopes that the following remarks from one who, for the last eighteen years, has been chiefly engaged in superintending repairs to all classes of vessels, may be of interest to the members of this Institution.

In the first place, the writer would draw attention to the question of beams in the case of large sailing ships, etc. Within the last eight years he has had to personally investigate eight or nine cases of large sailing vessels with two decks laid, wherein the beams have been found defective, the average dimensions of these beams being about 10 inches by 6 inches, Butterley section. According to the Registry rules, the length of the knees of those beams had to be from two and a half to three times the depth of the bulb; that is to say, in the case of a 10 inch beam, the knee would be from 25 inches to 30 inches, secured to the frames by, say, six to seven rivets. It is further stipulated that the depth from the throat to the corner of the beam shall be one and a half times the depth of the bulb, say, 15 inches.

In almost every case in which the beams were found defective, this has occurred when the vessel was in ballast, and not when loaded, the

fractures taking place from the middle of the throat, as shown at Fig. 1 (Plate I.), proceeding horizontally across the beam. None of the beams, which so proved defective, were found to be turned down and welded in the old-fashioned way (see Fig. 2, Plate I.), the reason being that the original beam had been thinned out slightly at the inner corner as shown. A piece of bulb plate had also been thinned out at the upper corner, and the junction of the two being what is commonly termed slab-welded (see Fig. 3, Plate I.). Naturally, when the vessel was in ballast, and the strain thrown on the upper decks to a considerable extent, those beams had given way.

In the last case, recently, there were sixty beams so fractured, and the only way of overcoming the difficulty, so far as was known, was to double-plate the beams at the cost of, say, £300 to £400, in which case the underwriters had to compensate the owner for depreciation, including repairs, to an extent of from £750 to £1,000 per ship. In the writer's opinion, a simpler and better way of repairing the beams would be to cut off the beam in way of the weld and fit a new turned knee, scarphing the new knee on to the old beam as per sketch (Fig. 4, Plate I.), and it is questionable whether this would not be as economical and certainly a better mode of construction than as at present fitted. Otherwise it would be preferable to fit the old-fashioned knee-plates direct on to the beams, but in any case a radius for the throat of the beam should be given in the classification rules, say, equal to the depth of the beam, which would solve the question of slab-welds.

STANCHIONS.—Since the introduction of the turret and the trunk system of steamships, it has become customary to dispense with the old-fashioned round stanchions, and to introduce a stronger stanchion of H section form, spaced further apart, riveted to the tank tops with an enlarged knee-plate, and to the turret or trunk alley-way above. This, undoubtedly, so far as regards strength, is an improvement on the round stanchions, especially in cases where transverse or lower beams are fitted and connected to these vertical H stanchions by means of diamond or bracket plates.

WEB FRAMES.—Undoubtedly, of the many benefits which shipowners and shipbuilders have received from the constitution of Lloyd's Registry of Classification, the fact of their having introduced web frames is one of the greatest. Originally, those web frames were fitted intercostally, the longitudinal stringers, etc., being carried continuously through same; but a wiser policy appeared to have afterwards prevailed, and, be it said to the credit of Lloyd's Registry, they inaugurated the

idea of continuing the web frame from deck to tank side continuously, at the same time boldly stopping all stringers and fore and aft connections, and attaching the same to the web frames.

The writer has often been much puzzled to know the origination of the web frame idea. Several years ago, when in Milford, a fisherman put the following question to him : "Assuming that you take a piece of material, say 2 feet long, supported between two points about the same distance apart, and weighted it until it breaks, dividing the weight of the material into the breaking weight, what is the strongest structure known? That is to say, suppose you take a bar of iron an inch square, or an inch round, and a bar of wood or copper or any other substance, how many times will its own weight be divided into the breaking weight?" After considering the matter some time, he informed the writer that a piece of bamboo, supported on two rings with one in the middle, was undoubtedly the strongest structure known as against its own weight. After several experiments, the writer found that that was so, and furthermore, on examining with a microscope the peculiar formation of the interlacing tubes of the bamboo which takes place in the region of the ring or diaphragm, he was greatly interested to find in what a wonderful manner the laws of nature excel the devices of man. The same strength is seen in a wheat stalk. Of the various specimens of bamboo that he measured, the average diameter was an inch, and the distance between the rings 8 inches; that is to say, eight diameters apart. Of course, it would be impossible to place web frames at such a distance as this in our present iron and steel steamers. He was therefore driven to conclude that the web frame idea is a combination between a bamboo and a corrugated furnace. But while advocating the web frame, which undoubtedly is a great advantage, he was afraid it was only recently that attention had been paid to the connection of the foot of the web frame to the tank sides, as there have been constant and varying instances of weaknesses at this point, owing to the strong web frame being attached to a comparatively weak floor. It is, therefore, necessary in designing a steamer where web frames are to be introduced, that the same idea should be carried out continuously from the bottom of the vessel and even continued along the beams, and so dispense with the requirement for stanchions, that is to say, to practically make the web frame a partial bulkhead extending along the beams towards the hatch coaming.

It is frequently the case that strong web frames are often placed on weak half beams within a space or so from the end of the hatchways.

The distance that these web frames should be spaced apart is immaterial within a given limit, so long as they are put in such positions, say, at the end of each hatchway, as to be of the greatest benefit to the vessel.

DOUBLE BOTTOMS.—In 1868, models were submitted to Lloyd's Registry of the various types of double bottoms then in vogue, the one which was most appreciated being what is commonly termed the Macintyre tank, in which the girders supporting the tank top were continued fore and aft, say, three on each side, the frames being cut at the bilge, and a continuous angle iron was carried fore and aft, brackets being fitted inside and out of the tank to connect the frames and floors to the tank side plate. As, according to the tonnage laws then extant, the measurement for tonnage was taken from the top of the floors, the shipowner, therefore, was debited with the tonnage of the difference between the top of the floor and the top of the tank, or, practically, of a space of 18 inches fore and aft.

In 1874-6, the writer designed what is commonly termed now the cellular bottom, the idea being to carry the girders continuously through the floors, which would, of course, be intercostal, and to carry the floor from the bottom of the vessel to the top of the tank. This idea was taken up by Mr. Denny, of Dumbarton, and, after some litigation, he succeeded in having the tonnage measured from the top of the tank instead of what would have been the top of the original floor. As the fitting of those girders continuously, fore and aft, was, to a certain extent, costly and took considerable time to construct, and as a great point of a shipbuilder's business is to be able to turn out a vessel in the shortest possible time and economically, some of the shipbuilders in the North of England conceived the idea of making the floors continuous and the girders intercostal, *i.e.*, running the floor from the centre keelson to the tank side, and introducing one intercostal in the place of three longitudinals, a floor being fitted upon every frame instead of alternately as previously, having large manholes, say, 20 inches by 15 inches, punched through the same for access (see Fig. 5, Plate I.).

It has been the writer's duty to examine many vessels of this construction, and, after having done so on the first occasion, although he claimed to be one of the originators of the cellular bottom, he certainly determined inwardly that if he ever had anything to do with the construction of iron or steel steamers he would not have any more cellular double bottoms, and he was sure, if any of the members had been in the habit of examining those vessels fore and aft, *i.e.*, crawling through the tanks, they would quite agree with him that for examination

purposes they are certainly a nuisance. But a much greater question than the convenience or inconvenience of the surveyor has now arisen, *i.e.*, through the floors being reduced in thickness owing to the depth, and being of steel they soon began to corrode quickly under the boilers, and at the present time one of the principal items that keep ship repairers employed in Cardiff and elsewhere is the renewals of double bottoms in way of the boiler tanks. This arises from two causes: firstly, through the heat of the boiler corroding the top of the tank; and, secondly, through the floors underneath the same also rapidly corroding. So far as the tops of the tanks are concerned, this could be obviated by raising the boiler and coating the same with non-conducting covering in the form of mattresses under the bottom. The tanks could further be preserved by adopting Mr. Landreth's patent method of ventilation; but a peculiar point to be noticed as regards the floors is that the corrosion which takes place is most rapid at the half depth line, that is to say, if the tank top is reduced, say, $\frac{1}{16}$th by corrosion in thickness, the floor in the way of a horizontal line drawn through the manholes is practically reduced $\frac{1}{8}$th during the same period. As a rule, it is necessary to remove seven or eight of these half floors, together with intercostals, and renew the internal material about every eight years.

In one instance, when the vessel was about four years old, the two floors supporting the boiler cradles about 6 feet apart had been fitted, say, $\frac{9}{16}$ths thick, the other floors fore and abaft and between being originally $\frac{7}{20}$ths. After a period of four years, when this vessel was examined, it was found that the floors, which were originally $\frac{7}{20}$ths, had been reduced in thickness to the extent of from $\frac{2}{20}$ths to $\frac{3}{20}$ths, while those under the girders, which were originally $\frac{9}{16}$ths, were not perceptibly affected. The deduction from that is, that the lighter floors being so thin allow a certain amount of vibration to take place which throws off a scale every time it is formed and allows a new scale to accumulate. This is the secret of one-half the trouble in the present steel vessels, *i.e.*, the floors and bottoms being too light to withstand the sudden shocks they have to sustain. It has struck the writer that it might be possible to build a simpler type of double bottom of thicker material (see Fig. 6, Plate I.), while dispensing with the floors altogether. The idea is not original, and has been adopted previously in many instances; but, as in case of vessels already built, and where the floors, etc., have to be renewed under the boilers, it is usually found that the frame angle iron through being covered with cement, etc., is in perfectly

good condition, he would propose to introduce a bulb plate, say, 8 or 9 inches deep by $\frac{7}{16}$ths thick, having the bulb on one side only, to be carried from the centre keelson to the tank side. He would also fit a stronger reverse angle iron to the tank top of bulb section, say, $4\frac{1}{2}$ inches by 3 inches, and the two to be connected together by bracket plates shaped out as shown on Fig. 7 (Plate I.), say, $\frac{1}{2}$ inch in thickness, to which of course the intercostals would be attached. In the case of new vessels, he would suggest that the bulb plate be dispensed with and an ordinary bulb angle iron or a Z-shaped bar of the same depth be fitted, and if this was adopted it would be the means of not only lengthening the lifetime of the tanks under the boilers, but also of strengthening the vessel in the case of stranding, and of giving greater facilities for examining the internal work fore and aft, while leaving freer air passages. Doubtless, there may be some objections to this mode, but it is put forward as a suggestion, leaving it to those who are so immediately concerned to adopt or improve thereupon.

There are many other points of interest as to the fastening of the tank side lugs, flange plates, etc., upon which he would like to delineate, but he hoped that the foregoing suggestions may lead to an interesting discussion.

DISCUSSION.

Mr. M. C. JAMES said he must confess to feeling considerable disappointment with the paper. From the comprehensiveness of its title one naturally expected to have some new proposals or information of interest put before them respecting the building and repairing of ships, but most of the matters touched up in it were considerably the worse of wear, having already been much more fully dealt with in one form or another in other papers previously read before this Institution. At the outset the writer of the paper informed them that for the last eighteen years he had chiefly been concerned with ship repairing. This, he (Mr. James) thought, accounted for some of the shortcomings of his paper, for he had frequently noticed that a too exclusive association with repairs tended to cloud, if not to dwarf, one's constructive ideas. In the designing or building of a ship, engine, or boiler they were guided by well-defined scientific and practical principles, but most repairs were largely governed by the exigencies of the particular case. Considerations as to time, accessibility, cost, port where the work is being done, and other similar matters, being the chief factors. Passing on to the

various details treated in the paper, he, for one, shared the writer's condemnation of the slabbed beam-knees. The slabbing of the knees was a cheap, nasty, and wholly unsatisfactory method of forming the beam end. Personally, no matter what the section of beam was, and putting aside the question of appearance, he should prefer a plate knee soundly riveted to the beam, but not with such an extraordinary arrangement of rivets as that shown in Fig. 4 (Plate I.). Mr. Aisbitt must surely have been thinking of boiler repairs when he sketched out that crowd of rivets. As to the H section pillars referred to, they, no doubt, in some types of ship formed very effective structural members, but in high-class cargo ships carrying fine bale goods this section of pillar was not suitable. Regarding web frames, he did not agree with the writer's admiration of these, and he was at a loss to know why he should have been so puzzled as to the origination of the web frame idea. If, instead of talking the matter over with that philosophic Milford fisherman, he had referred to an ordinary text book on practical shipbuilding, he would have found that so long ago as 1862, the late Mr. Scott Russell in describing his longitudinal system of framing before the Institution of Naval Architects said—"I have between these bulkheads what I call partial bulkheads, or the outer rim of a complete bulkhead, with the centre part omitted, so as to form a sort of continuous girder running transversely all round the ship;" and if the writer had taken the trouble to read up Scott Russell's magnificent work on *Naval Architecture*, he would have found that the author specially cautioned constructors to avoid rendering bulkheads, either whole or partial, into being what he calls, if he remembered rightly, knots or knobs in the cane, but to take care to prevent the localisation of strength by distributing the strength of the bulkheads, etc., by means of large brackets and longitudinal keelsons. The tendency nowadays is to build ships on the deep or girder frame principle rather than with web frames, as a much more uniform and efficient distribution of transverse strength is obtained by the first named system. Coming now to double bottoms, Mr. Aisbitt puts forth a claim, which he had observed he had introduced in one way or another in almost all other papers he had seen which he had read before kindred institutions, that was, that between the years 1874 and 1876, he designed, and was one of the originators of, the cellular double bottom. It would certainly be well, if only for the sake of historical accuracy, if this knotty point could be settled once and for all, and he thought one of their respected Vice-Presidents (Mr. G. B. Hunter) could shed considerable light on this matter. In the very able paper on "Water Ballast," read

by Mr. B. Martel (of Lloyd's) before the Institution of Naval Architects in 1877, a most complete *résumé* of the introduction of the various types of double bottoms was given, and Mr. Martel gave the credit of the first proposal in 1876 for a cellular double bottom on the bracket system to Messrs. Austin and Hunter, of Sunderland. Moreover, instead of, as Mr. Aisbitt says, some of the North of England shipbuilders conceiving the idea of making floors continuous and girders intercostal, Mr. Martel showed sections of the bottom built in this way in a ship constructed in Italy for an English firm in 1874. As to the lamentable corrosion which takes place in tanks under boilers, it should be noted this was not solely confined to ballast tanks constructed on the cellular principle, but it is also found, though in perhaps a rather less degree, in the girder on floor system. The new section proposed by Mr. Aisbitt is nearly identical with that adopted in war ships, and was first fitted in the old armour-clad "Bellerophon" in 1865. Mr. Aisbitt surely did not seriously propose to fit only one longitudinal in a vessel of the beam shown in his sketch. The one-sided bulb and the very small bulb angle would be very awkward sections to obtain, and most unlikely to be kept in stock in a repairing works. There was no doubt much could be done to lessen the corrosion in boiler room tanks by increased ventilation, and a very simple device sometimes adopted with considerable success was to fit portable planks between the boilers and tank top with an air space above and below, the planks were laid on rest bars, which were riveted in the boiler stools, and could easily be removed when cleaning or repairs are to be done. In conclusion, he begged to thank Mr. Aisbitt for his paper.

Mr. J. R. Fothergill (Vice-President) thought the value of Mr. Aisbitt's paper consisted in the practical subject-matter referred to in that it should induce a good discussion, particularly by those associated with the repairs and supervision of vessels. He (Mr. Fothergill) might say he had had considerable experience in the repairs of steamers' ballast tanks, necessitated by corrosion. Of course, as they all knew, it was the tank under the boilers where they found the most rapid and greatest destruction. The question arose, why should corrosion be so much more active in these particular tanks when practically there was no variation in the construction of the bottom throughout the vessel? The answer undoubtedly was: heat from the boilers was the main factor in assisting and accelerating corrosion. If this was so, then the remedy was to prevent the heat being given off to the tank. Although he knew there were some who disagreed with this opinion, yet he was

satisfied that those who had the opportunity of personally investigating the cause found the evidence conclusive. Many of them knew that in ordinary cargo boats it was impossible to pump the tanks absolutely dry, in fact 3 to 4 inches of water might be taken as the average quantity which could not be pumped out and which remained in when the tanks were "dry." Unless careful attention was paid to the placing and securing of the pump suction pipe strums, also to the position of limber holes, cementing, etc., the excess of water that could not be pumped out would be much increased. Now, what took place was this: the tank top and floors were considerably heated by the close proximity of the boilers. As the vessel pitched and rolled the water in the tank splashed up the floor plates, producing about the middle line of the plate an alternate condition of damp and dry, the moisture being evaporated by the heat. This condition enormously facilitated corrosion, producing the rapid destruction of the material. The top plates were attacked on both sides in a somewhat similar manner; on the underside by the ascending vapours and possible splashes, on the top by the wash of bilge water, etc., and in both cases augmented by heat. Such being the cause, it would appear if possible the remedy was to dry the tanks and prevent the boiler heat affecting them. He was afraid the drying of the tanks was impracticable with the present type of bottom. Some few years ago the late Mr. Fred. Wailes read a paper before the Institution in which he advocated a system of box keel into which the tanks would drain and so could be pumped dry. He (Mr. Fothergill), although realising the advantages of such an arrangement, thought the difficulties in practical application and cost would prevent its introduction. Many suggestions were made and plans advocated to protect the tanks from the heat of the boilers, for instance: induced ventilation of the tank also under the boilers; the laying of a wood floor under the boilers; clothing the bottoms of the boilers with mattresses, etc., etc. Personally, he favoured, where convenient, the keeping of the boilers well up. In two cases in particular, in which he specified the distance from the tank top to the bottom of the boilers was not to be less than 2 feet 6 inches, the usual distance being 12 inches or even less. He found this a most effective remedy, but unfortunately it could not always be carried out on account of difficulties with bunkers and stringers. The destruction in some cases was very much more rapid than in others, probably material had something to do with it, and he had observed the desire to keep coals, dirt, etc., out of the bilges had led to the close boxing in all round the

boilers which had actually prevented any possibility of ventilation, and thus the temperature under the boilers became very great. He had known a case of the floors and tank tops immediately under the boilers being completely destroyed and renewed in less than four years, although they might place the average life in what was known as the modern cargo steamer as eight years. He did not think Mr. Aisbitt's suggestion that it was desirable to thicken the floors, etc., immediately under the boilers was the correct thing to do; it appeared to him the proper thing was to remove or prevent the cause of damage. He did not propose to discuss what Mr. Aisbitt had said in supplementing his paper, because the President had ruled it was not in order, but he might be allowed to remind Mr. Aisbitt that only a short time since a very interesting paper had been read before the Institution by Mr. McGlashan on the question of the ballasting of modern cargo steamers. He thought if Mr. Aisbitt carefully read not only this paper, but the discussion, he would find very much that would interest him. In conclusion, he begged to thank Mr. Aisbitt for his paper.

Mr. S. J. P. Thearle (of Lloyd's Register), by invitation of the President, said he was deeply obliged for the courtesy extended to him in asking him to take part in the discussion upon this paper which they had heard from Mr. Aisbitt. Papers of this description, as had already been remarked, were particularly valuable, inasmuch as they served to elicit opinions that might not otherwise be expressed. Mr. Aisbitt had commenced by speaking of failures which he had witnessed in slabbed beam knees, chiefly in sailing vessels. He had had some experience in that matter, both as a surveyor under whom such vessels were built, and as a surveyor under whom they had had to be repaired. He would point out to them that some years ago, he thought in 1885, the committee of Lloyd's Register had caused some experiments to be made with a view to determine the relative values of turned knees, and those formed by welding or "slabbing" in the manner described by Mr. Aisbitt. It was found that the slabbed knees gave, relatively, the least satisfactory results. But in those days, beams were made chiefly of iron, and it was a very easy matter, indeed, to weld iron as compared with welding steel; hence, although the slab knee did not give such a good result as the turned knee, yet the result was sufficiently good to sanction the adoption of the system whenever a builder or shipowner preferred to do so. When, however, steel came into use, it was found to be not so easy to weld it, and so at first the smiths, in welding the slabbed knee, introduced

a strip of wrought iron to effect a better junction. But that was not quite satisfactory, for, after all, the weld was an iron weld and not steel united to steel. In course of time smiths became more familiar with the new metal, and succeeded in making uniformly sound steel welds; but here and there beam knees got into the hands of inexperienced workmen, and this was doubtless the cause of the failures referred to. These took place, not from thinning of the material, as suggested by Mr. Aisbitt, but because steel being welded to steel the union was imperfect, the work not having been done by properly skilled men. It was impossible for anyone looking at the weld to discover its unsoundness. He could give them an experience of his own of a steel steamer built in the west of Scotland, where it sometimes rained. The prevailing south-west wind and rain beat upon the beam knees during many weeks, and one day he noticed a thin streak of rust on the opposite side of a slabbed knee to that on which the rain had so long been beating. Now, although the weld appeared to be sound it was really not so, for the rain had actually found its way through and deposited rust on the opposite side. Upon examination, other knees showed similar indications and the corresponding beams had to be taken down and the knees properly welded to them. He quite agreed with Mr. Aisbitt that the proper choice, if they had to decide between the slabbed knee and the plate bracket knee, was the latter, and in sailing vessels especially the plate bracket knee was certainly to be preferred. Then with regard to hold stanchions: although those of H section might, perhaps, be objectionable in the carrying of bale goods, yet massed pillaring of this kind is preferable in point of efficiency to the ordinary pillars of circular section. The rules fixing the diameters of pillars were made at a time when tiers of beams were fitted, which are now often omitted, and web frames, deep frames, etc., are now fitted in lieu of them. Hence pillars are often very much longer than was at one time contemplated, and it became a question whether in these deep vessels, that is deep from inner bottom to the lowest tier of beams, a system of massed supports, associated with intercostal girders below the beams, is not to be preferred to these long pillars of circular section, which must inevitably be more flexible. Regarding the origin of the web frame system and the reason of its adoption, he (Mr. Thearle) agreed with a previous speaker in crediting Mr. Scott Russell with the original idea. In association with ordinary framing the web frames and deep side stringers certainly afforded valuable elements of stiffness to the shell plating between the transverse bulkheads. But in considering the

connection to be afforded between web frames and margin plates, and, indeed, between ordinary deep framing and margin plates more remains to be done, as results observed upon some vessels coming under survey abundantly demonstrated. But as Lloyd's Committee were now engaged in the consideration of the question it was not for him, as a servant of the society, to say any more on the subject. By and by the society would doubtless produce amended rules upon that question. In regard to cellular double bottoms he was surprised to find Mr. Aisbitt claimed to be their originator, for there was a vessel having a cellular double bottom built in 1874 in Italy, and Messrs. Austin & Hunter, of Sunderland, built a vessel in the year 1876 having the fundamental principles of the cellular construction as since carried out. Moreover, the Admiralty built the "Warrior," the "Black Prince," and the "Bellerophon," so far back as the early sixties in the same way. Turning to the wasting of the double bottoms under boilers it was, without doubt, due to the joint action of moisture and heat. Moisture would not itself cause rapid corrosion, as is seen by the greater durability of double bottoms in cargo holds, nor would heat alone cause rapid corrosion, for if they did not put water in the compartments under the boiler they lasted much longer. It was the association of heat with moisture that caused rapid waste. Many attempts had been made to avert this evil. Raising the boilers, fitting thick layers of Portland cement on the tank top, introducing baffle boards under the boilers and other devices had all more or less failed. Perhaps the best way was to ventilate the tank thoroughly and so keep it dry. A way tried on the Clyde, and found very successful, was to have the air pipes made additionally large so as to admit of a considerable down draught, and then to lead other pipes from the tank to the funnel uptake. The result was a continual current of air passing through the tanks, which were further kept dry by so fitting the pump suctions as to remove all the water that might collect in them. In this way the double bottom compartments under the boilers were kept dry and corrosion much delayed. The system of double bottom construction which Mr. Aisbitt suggested was, he (Mr. Thearle) thought, such as very few shipbuilders would willingly adopt. It was very similar to what was carried out in the "City of Paris," and not at all a new idea. While offering these criticisms, he (Mr. Thearle) again desired to thank Mr. Aisbitt for his paper, and thought that gentleman would receive the thanks of the Institution for raising a discussion on some interesting points. He trusted Mr. Aisbitt would take his criticisms in good part.

Mr. G. B. HUNTER said he joined the gentlemen who preceded him in thanking Mr. Aisbitt for the paper he had brought before them. While they, as shipbuilders, had a very large experience of their own, he quite admitted that they could learn very much from those engaged exclusively in the repairs of steamers; and he knew Mr. Aisbitt had had a very large experience in that work, and was very much respected in connection with it. Therefore, he (Mr. Hunter) would like to express his thanks to him for his paper and his regret that he had not had a little more time to elaborate it and give them further benefit from his experience. There was only one part of it that he would touch upon in any detail; and if the President would pardon him, his remarks might be slightly wide of the question of repairs, but they would be quite pertinent to the paper. The subject of water ballast, and in particular, what was commonly known as the cellular type of double bottoms, was a subject he had been very much interested in. He thought some of the remarks which had been made in and about the paper were caused by a somewhat loose method of speaking of cellular double bottoms. He must say his friend, Mr. Aisbitt, was rather loose, and even inaccurate, in some of his expressions. He (Mr. Aisbitt) spoke of "cellular" double bottoms as having originated in 1876. Mr. Aisbitt knew, and they all knew, that cellular double-bottomed ships were built long before 1876. He did not know whether Mr. Scott Russell—it was a long time since he read him—constructed double-bottomed ships? Mr. Thearle said he did, and therefore it must be so. Palmer's Company, he was informed, prior to 1876 built two ships of that type. They had not double bottoms for ballast, but were cellular ships with an inner and an outer skin. The cellular construction of double bottoms, as introduced in 1876 by Messrs. S. P. Austin & Hunter and largely followed since, was distinguished, not only as being of the cellular-bottomed type, but as being a combination of the cellular double bottom, with ordinary transverse frames spaced the ordinary distance apart; and that combination, he thought, was one of the two chief reasons why that type of ship was so rapidly adopted. It was simple and convenient in laying off and construction, and it enabled shipbuilders to take up conveniently the cellular type of double bottom, which they had before found inconvenient with regard to speed of construction and in other ways. Another advantage of great importance in merchant ships which may have to be allowed to touch the ground when loading, discharging, or repairing, was the additional strength given to the bottoms by the close-spaced frames in the s.s. "Fenton" and other steamers built by his old firm of Messrs. S. P. Austin &

Hunter, as compared with the Admiralty and some other types of cellular double bottoms. The late Mr. William Denny took great interest in the improved type, and was the means of persuading (by process of a lawsuit) the Board of Trade to measure the tonnage of these cellular double-bottomed ships in a fair way, so as to include all the cargo space, but not the ballast space. This concession in the tonnage measurement was the second chief reason why the new type of double bottom was so rapidly and generally adopted. The same principle has more recently been applied to the measurement of all ballast ships, even to the extent of excluding the forepeak from measurement when used for water ballast and not for cargo. Rather a strong point was made by Mr. Aisbitt in his paper in connection with the examination and repair of water ballast tanks in double bottoms, to the effect that after he had once had the pain of crawling through one of these double bottoms, although he claimed to be one of the originators of this type of ship, he began to think that after all it was not such an improvement as he had thought it. He (Mr. Hunter) thought the reason why Mr. Aisbitt found this difficulty was not because these ships were of the type of the "Fenton," but because they were not of the "Fenton" type. The "Fenton" had room to move about in the double bottom, because the floors were not spaced so closely as the frames. But in recent years, and for the sake of still greater convenience and speed of construction, it had become customary to fit the floor plates more closely on every frame.

Referring to the remarks of Mr. Thearle, he thought he would be expressing the feeling of all the members present if he expressed their welcome to Mr. Thearle in this, perhaps, his first appearance at this Institution. He was quite sure the Institution, and they on Tyneside in other ways, would benefit largely from Mr. Thearle's presence amongst them.

If the arrangement of wider spaced floor plates had been continued it would have got over the difficulty—he thought a real difficulty—of the inaccessibility of the ordinary double-bottomed water ballast tank. Those who abandoned, or who had never adopted, the system of fitting the floor on every frame had, he thought, acted wisely, although his present firm had for some years past adopted the floor plate on every frame, because it was so convenient in construction, and because it was favoured by the classification surveyors. He thought something in the way of making the ballast tanks more accessible exceedingly desirable.

They were all interested in the remarks made, more especially by

Mr. Fothergill, concerning corrosion under the boilers of steamships. They knew the terrible expense this had caused. He did not feel that the remedies proposed would be adequate. For instance, that suggestion by Mr. James to get over the difficulty by fitting planks under the boilers on the edge of angle irons riveted on the tank tops. That might alleviate the evil, but he thought it would not be a cure. He thought the moisture and dirt under these planks would be the cause of much corrosion on the top of the tanks, and that the planks would not prevent the heating of the water inside the tanks. This heating was the cause of the trouble. In corroboration of the theory that the cause of the injury was the combination of moisture and heat, he had observed in one or more cases where he had carried out extensive repairs the excessive corrosion, not only under the boilers but throughout the whole length of the ballast tank. If they observed the solid floor plate dividing the ballast tank under the boilers from the ballast tank under the engines, corrosion was to be seen only on one side of the plate and not on the other side, which showed that wherever the warm water heated by the boiler circulated, there the corrosion took place. Then the fact of the engineering staff finding it impossible to pump the water entirely out of the tanks, as mentioned by Mr. Fothergill, accounted for the corrosion and deterioration being so rapid.

As to the point in Mr. Aisbitt's paper in which he claimed to be the author of the cellular bottom steamship, it happened that Mr. Aisbitt was draughtsman for Messrs. Austin & Hunter, and was employed to make the drawing for the "Fenton," and he had claimed that he had made the invention so often that he (Mr. Hunter) was quite sure he had come to believe it. George IV. got into his head that he was at the battle of Waterloo and had won the battle. He appealed to the Duke of Wellington for corroboration on one occasion, to which the Duke replied, "I have often heard your Majesty say so." He (Mr. Hunter) would like to confirm what Mr. Aisbitt imagined, but could not. Mr. Aisbitt was a draughtsman, and a very good one, but, really, he did not design the steamer or the double bottom. As a matter of fact, he (Mr. Hunter) was employed by the late Mr. Wm. Pile to build two vessels of similar construction in the ballast tanks long before the "Fenton." These two steamers were the "Titian" and the "Charles Howard," and a few years ago the drawings of those steamers again came into his (Mr. Hunter) hands, and he found that those plans, which had been drawn by his own hand, showed a similar construction to the "Fenton."

Mr. FOTHERGILL—Would Mr. Hunter, if he has drawings of these early ships, allow copies to be made to put in the *Transactions?* It would go a long way to settle this controversy.

Mr. HUNTER said he returned them to Lloyd's; but would try.

The discussion was adjourned, and the meeting concluded.

NORTH-EAST COAST INSTITUTION OF ENGINEERS AND SHIPBUILDERS.

FIFTEENTH SESSION, 1898-99.

PROCEEDINGS.

THE ANNUAL DINNER.

The Fourth Annual Dinner of the Institution was held on the evening of Friday, December 9th, 1898, in the Westgate Assembly Rooms, Newcastle-upon-Tyne. The President (Sir B. C. Browne, D.C.L.) occupied the chair, and Mr. J. R. Fothergill (Chairman of the Dinner Committee) the vice-chair. Covers were laid for over 250 gentlemen.

The guests of the institution included the Bishop of Newcastle (Dr. Edgar Jacob), the Mayor of Newcastle (Councillor Geo. Harkus), the Sheriff of Newcastle (Councillor A. P. Andersen), the Rev. Principal Gurney (Durham College of Science), Admiral Cleveland, Mr. J. R. Baterden (President of the Local Branch of the Institution of Civil Engineers), Mr. Clarkson (President of the Cleveland Institute), Mr. Woodman (President of the Foremen Engineers' Association), Mr. John Gravell (Bureau Veritas), Mr. J. B. Simpson, Col. Bingham, Mr. W. L. Courtier-Dutton (British Corporation Register), Mr. H. Laughrin, R.N., and Mr. H. H. West. There were also present:—Past-Presidents—Mr. Wigham Richardson, Sir Thos. Richardson, M.P., and Col. H. F. Swan. Vice-Presidents:—Messrs. G. H. Baines, W. G. Bone, Arthur Coote, W. H. Dugdale, J. R. Fothergill, H. Fownes, D. B. Morison, J. M. Rennoldson, J. Tweedy, R. L. Weighton. Members of Council:—Messrs. J. H. Heck, W. Hök, R. H. Muir, H. B. Rowell, W. G. Spence, M. C. James, P. Phorson, M. Sandison, R. Wallis, W. C. Mountain, C. Rennoldson, A. G. Schaeffer. Mr. Geo. E. Macarthy (Hon. Treasurer), Mr. J. Duckitt (Secretary).

Among the general company were:—Messrs. C. A. Bushell, C. Macdonald, A. Gulston, R. O. Heslop, Col. Bingham, Messrs. Jos. Nodder, J. Walker, C.E., H. Ward, J. Nixon, T. E. Smith, W. Swinney, H. E. Hollis, C. H. Reynolds, W. G. Reynolds, Jas. Matthews, R. Fletcher, R. Park, Jas. Scott, J. Bulmer, A. Harrison, Nelson Foley, R. Hirst (Lloyd's), Shirai, Funikoshi Jansen, Capt. Vasaleif, Capt. Chen, Engineer Lai, Mr. J. J. da Cruz, Commander Tan, Messrs. J. D. Christie, C. Dowsen, W. J. Deighton, L. Rusden, E. F. Dodds, J. B. Furneaux, P. D. Winstanley (Bureau Veritas), R. H. Winstanley, R. S. White, F. Graham, C. Landreth, C. H. Tate, J. C. Stirzaker, T. Millar, E. L. Orde, W. Stevenson, L. Evans, R. Muir, G. Donkin, Jun., H. P. Norton, U.S.N., etc.

Mr. R. Smith's select band discoursed during the evening an excellent programme of music.

"THE QUEEN."

The PRESIDENT said that he need hardly say that their first toast was "Her Majesty the Queen and all the Royal Family." As there were many toasts to come after he simply gave "The Health of the Queen and Royal Family."

The toast was accorded musical honours.

"ABSENT GUESTS."

The PRESIDENT said they would all be extremely sorry for the absence of a distinguished guest that evening—he referred to Sir John Durston, the Chief Engineer at the Admiralty. He promised to be with them; but at the last moment he was detained on important Admiralty business, and he asked him (the President) to express his great sorrow in not being with them that evening. Mr. W. Boyd and Mr. F. C. Marshall (Past-Presidents) also expressed their great regret at being absent on account of ill health. He should now call on the Lord Bishop of the Diocese to propose the next toast,

"SUCCESS TO THE INSTITUTION."

The LORD BISHOP OF NEWCASTLE said, when yesterday he received a letter from the Secretary of this Institution asking that he should propose this toast, he wondered whether he had found any occult connection between the office of a bishop and an Institution for Engineers

and Shipbuilders. He remembered it was the province of a bishop to be large minded, and sometimes to build peaceful bridges over contending difficulties. But he wondered whether that might be the connection between his office and the work of those, many of whose magnificent bridges he had witnessed in journeys through the world. He also remembered that there were other things they might possibly be supposed to have in common. He was supposed by some to have a turn for ecclesiastical finance, and he wondered whether floating schemes of ecclesiastical finance could have any possible connection with the business of those who floated the navies of the world? But in all these matters he was completely perplexed, and so he had to leave the problem unsolved, and simply to suppose that he was entrusted with a brief that night, and desired to propose, as he did with the greatest pleasure, "Success of this Institution." Now, there were three or four points which had struck him in connection with that Institution. One was that it was purely scientific. Therefore they had asked a man whose education had been purely classical to propose success to an Institution which was purely scientific. But though his had been a classical education, and though he must disclaim any knowledge of science whatever, yet from a distance he was bound to say he did admire the scientific spirit, because it was the search after truth. All men were able to meet together as scientific men, putting aside any prejudice, which was eminently unscientific, and studying, so far as they could, to learn and to advance that branch of science which was under their special care. He could not help feeling that if this was one leading note in their Institution then on that account alone, and first of all, it deserved hearty support. If there was a scientific spirit which inspired the young men of their profession, that was a spirit which was likely to be of the greatest possible value in all the inventions which might come in the future, and in the keen competition which there must be in their profession throughout the world. His second point was that it was not only a scientific spirit which was cultivated there, but it was a great combination. It was a combination of men of two great professions, and not only so, but it was a combination of men engaged in different grades in these great professions. He was told that employers, with their managers, draughtsmen, and assistants, were all welcomed as members of this Institution. It was obvious that it hardly needed any one to enforce the idea that men could do in combination what they could not do alone. There was not a single man, he did not care what his profession might be, who could afford to disregard the organs of public

opinion of the profession to which he belonged. There was so much that was new in these days—science was so much specialised, that it was very hard to find a man with the sort of universal science which perhaps fifty years ago was attempted. Men were obliged to specialise, and just in proportion as they specialised they were bound to have recourse to those who had specialised in other lines in order to attain to combined results in the various branches of science. They had in their Institution not only the opportunities given by books and lectures, but what was much more important, opportunities of meeting with living men and learning what were the latest advancements of science in the various professions to which they belonged, and he ventured to think that such a combination as theirs—a combination of men engaged in the different grades of two professions, was a good thing. He asked at dinner the other evening what really was the secret of that Institution, and a young man, pointing to his father, said, "Why, it's to make me like him." He (the Bishop) thought that an admirable definition, and could not help feeling pleasure in the fact that he would that night meet, not only the heads of the profession, but many young men in various grades and branches of it all aspiring to eminent positions in those professions. That Institution, however, was not merely a combination of men who had a scientific aim. It was a North-East Coast Institution. Now, he himself had come to the north from the extreme south. His first visit was paid some thirty-five years ago, when he was just going to Oxford, and he was struck with the tower of St. Nicholas and examined what he thought was a remarkable railway station, little thinking that he would ever come to be a bishop, and still less that he would be Bishop of Newcastle. He could only say that since his home had been here he yielded to none of them in his patriotism for the North-East Coast. He had not the smallest desire to go and live in the south again. He retained every friendship he had made in the south, but he now liked to get his friends to come and see him in the north. Once in coming from California, a young St. Louis man asked him anxiously if in San Francisco there was any idea of the greatness of St. Louis. That local pride in the States, as elsewhere, was a public-spirited pride that might well be cultivated in every part of the world. It was the pride of Newcastle, it was, he hoped, the pride of the North-East Coast, that they who lived there at least thought the sun rose and set there. At all events they were proud of it. He believed there was no district which had a more vigorous trade, no district which had more important works in connection with shipbuilding and engineering, no district which had

a greater patriotism, and in which men more naturally clung together. For all these reasons—because it was a scientific Institution, because it was a means of combination whereby the skill and knowledge and experience of some were placed at the disposal of all, and because it was a North-East Coast Institution which warmed their local patriotism, and because it was an Institution which in twelve years had reached upwards of 1,000 members in an object which they all believed to be sound and good, that he had pleasure in proposing to them that night the toast of "Success to the Institution."

The PRESIDENT, on rising to respond, said he was exceedingly proud to have the honour that evening of returning thanks for the toast which the Lord Bishop had so kindly and ably proposed. He certainly thought that their Institution, young as it was and large as it was, was one in which they had reason to feel proud. It showed enthusiasm, harmony, and sympathy among the engineers and shipbuilders of the north of England. That was the spirit which had enabled them to go so far and would enable them to go still further. In that respect he would like to say a word about the dinner that had brought them together. It was not only good in itself, but it was an illustration of a great truth, and that was, that their profession was not merely a task whereby each had to earn his daily bread, but it ought to be the pleasure of their lives. Every man who wished to live a life worth living ought to enjoy his work and take a pleasure in his work. There were some dreadful people going about making speeches and writing to the papers calling working men "sons of toil," as if they had a certain nightmare to bear continually. He should hate it if a man were to call him a son of toil. In his opinion, work was the pleasure of one's life. One of the great charms of engineering and shipbuilding was that they did not work alone. When they did a thing they did it as one of a hundred or one of a thousand. They met at such gatherings as this to show that no amount of professional rivalry or jealousy could destroy that respect which they ought to feel for each other. The great curse of all professional life was professional jealousy; and he liked to see men of one profession approaching each other, and helping each other, and improving each other as a general rule. An engineer was a man who found something somewhere and put it down somewhere else. If he made a railway or built a steamer—whatever he did—he was almost always shifting some body or something from some place to some other place where they were not before. What they wanted in their work was "a long pull, a strong

pull, and a pull altogether," and that was how they carried out their great schemes. They were proud of each other's achievements. He remembered when he went to Elswick as an apprentice the fame of the Armstrong gun burst upon the world, and he knew that they, lads at Elswick, were as proud of the gun as if they had invented it themselves. And so it was with anything else. Last year, at the Naval Review, was there not a little steamer that ran in and out and went faster than any there, and were they not all proud of the fact that that was a Tyneside steamer built by Mr. Parsons? In former days, when people found anything out, they used to try and keep it secret. In these days they were pleased to meet the Mechanical Engineers or Naval Architects and show them round the works, and give them a good luncheon, and say "Come back again soon." That was the spirit in which to carry things on, and it was the spirit in which he hoped they would continue to act. A good many of them were getting up in years, but there was great satisfaction in the thought that they had a lot of young men coming on to take their places when they were gone. He was glad to think they had got a good, large Graduate section, in which they read papers to each other, and contradicted each other, and in that way sharpened each other for the work that was before them. He hoped to be present at their dinner to-morrow week. What he always told these young men was this, that from his observation and experience it was the young men that read papers who became the distinguished engineers of the future. Depend upon it, there was nothing like being able, not only to have good ideas, but also to be able to express them clearly, to be able to defend them against criticism, to see wherein they were weak, and go and improve them for the next time. He was sure they were extremely pleased with his lordship's kind words, and hoped they would do all they could for the good of the profession and to help each other.

"KINDRED INSTITUTIONS."

Sir THOS. RICHARDSON, M.P., felt it a great honour to have this toast placed in his hands; but confessed that he thought there were other Past-Presidents that would have fulfilled the duty much better than he was able to do himself. He believed it was the wish of them all that speeches should not be long that night. As their President had said, they had an Institution of which they could in every way be proud; but at the same time they must not forget that they were amongst institutions of a similar kind, a junior institution. Still, they had gained a position and they had done work which entitled

them to rank amongst some of the oldest institutions in this country. Well, how had they attained that position? He said, not only by their own endeavours; but he said in a very large measure by the assistance and encouragement which they had received from the kindred institutions of this country. When they thought of the advantages of such institutions, especially to the younger members, did they not feel what a benefit they would have been when serving their time, and it was that spirit and feeling which ruled them in upholding such an Institution as they now had on the North-East Coast. Perhaps, unconsciously, they, the older members of the profession, wished the younger members to get on so that they might take a rest; but he believed that in this time of keen competition—a competition, as had been said, among themselves in which there was no jealousy—but with all the foreign competition to deal with, they could not do too much to educate the rising generation of engineers and shipbuilders in this district. It was satisfactory to know that they were not an Institution alone, that they had the good will of all kindred institutions. He thought it was the Bishop who said that this was the day of the specialist; that was, that the day of the all-round man had gone by: that was, that the advance of science had made all men as one man to grapple with any one special subject, and so it was amongst the institutions of this country. They were all anxious to help one another to get on, to help each other as well as they possibly could, and to help every one in every possible way. He was sure the toast of "Kindred Institutions" would meet with a very hearty reception, and he had great pleasure in coupling with it the name of his gallant friend, Admiral Cleveland, who was a member of the Institution of Naval Architects.

Admiral CLEVELAND, M.I.N.A., said he felt extremely flattered to be called upon to reply to this toast. He felt, like the Lord Bishop, great curiosity as to what particular qualification he had for the post. He arrived at the conclusion that he was asked as a naval officer who had been associated all the best days of his life in obtaining familiarity with the creations of their brain. When he said this, that after a very long experience he never knew the navy to be in such a state of efficiency, of preparedness, both in *personnel* and *matérial*, as it was at present, and when he reflected that the efficiency of the *matérial* was due to them and kindred institutions, they might realise how proud he felt to be called upon to reply to this toast. When he thought of the large—of the enormous—size of their ships, their powerful engines and boilers,

great guns, those dreadful torpedoes, and the electric light, all these things that had sprung into existence since he had been in the navy, and that it was all due to what they had done, he felt that the country at large had confidence in the excellence of their work. Only a few days ago, when in a most critical period of their history—when almost on the verge of war—the confidence of the public in these machines carried us through without a panic, which was a thing he never knew to happen before—the imminence of war without panic or any disturbance of trade or of the industry of the country. Now, he ventured to think that was a compliment to the engineers of this country, for it was shown that the people had every confidence in their work. Well, he would not detain them, he was not an orator; but he felt as a naval officer that the special thanks of the navy were due in a great measure to the members of this Institution and kindred institutions for their services to the country at large.

"OUR GUESTS."

Mr. WIGHAM RICHARDSON was sure, in proposing the toast of "Our Guests" that evening, he should best express the sentiments of that Institution when he gave it the form of expressing their thanks for their kind assistance and attendance at their annual dinner. They had been reminded, among other things, that theirs was a young, vigorous, and flourishing Institution; at the same time, although they might feel themselves rather "cockie" and self-reliant, they did feel, and gratefully feel, that those who honoured them with their presence on an evening like that were worthy of their sincere thanks and of the very fullest bumper that they could drink. They were honoured that evening by the Lord Bishop of the Diocese, who in eloquent periods had expressed thoughts that they should not easily forget. They had also a distinguished admiral, not only a representative of the British navy, but of the Institution of Naval Architects; he alluded to Admiral Cleveland. He had on his right hand the Principal of the Durham College of Science, who had raised the status of scientific thought to a recognition which it never had before. They had near him another gentleman who represented the great industry of this district—that was to say, the coal trade. He alluded to Mr. J. B. Simpson—a man to whom they might apply, if his lordship would allow him, the Latin proverb *Spem reduxit*, for he had written upon the question of the coal supply, and he declared that if they only went below the limestone or Silurian or some other strata they would find as much coal as they had yet won; or if not,

certainly an abundance. Beside him was Mr. J. Gravell, of the Bureau Veritas, a gentleman who had brought from the shores of the sunny Adriatic an amount of practical experience in shipbuilding and mathematical aptitudes that had been of great use to this district; Mr. Woodman (President of the Foremen Engineers), and Mr. Clarkson (President of the Cleveland Institute, founded mainly by his friend, Mr. Jeremiah Head, which was famed for the original and instructive papers read before it). They had also from the far north (from Glasgow) their friend, Mr. Courtier-Dutton, representing the British Corporation, which had introduced that element of free thought and competition which had done so much to waken some of the older societies. They had on his left the Sheriff of Newcastle, a gentleman who, he believed, came across with their beloved Princess of Wales—an honour to the country of his adoption. Finally, they were honoured by the presence of their city chief, the Mayor of Newcastle; and he ventured to associate this toast with his name. He would not prolong his remarks further, but ask them to honour the toast of "Our Guests."

The Mayor of Newcastle thought he would voice the feeling of all the guests that night in expressing the honour and pleasure they had in being present at the invitation of so distinguished a body as that of the North-East Coast Institution of Engineers and Shipbuilders. He was very pleased to hear the Lord Bishop say, in speaking of the young man who wanted to be like his father, that it could only be by the same perseverance and industry. It often happened that the father built up a large concern, and a son or nephew traded simply upon the name thus made. This was the case with the blacksmith who, making an implement, let the steel slip from the blade he was welding, but let it go with the remark: "The name's good enough." Now, he hoped their young men would be like the one mentioned by the Bishop, wanting to be equal to their fathers. This Institution (continued the Mayor) embraced men who were intimately associated with the great works on Tyneside and the North-Eastern District, which had so much to do with the prosperity of the community; and it could not but be gratifying to all to know that the present was one of the most prosperous periods in their history. There was abundance of work, and if only disputes between employers and employed could be avoided there was every prospect of long continued prosperity. Corporations shared in this prosperity. There was an increased demand for houses, and for a better class of house; and this tended to increase the rateable value of a

town, and so added to the amount of money available for corporations to expend on public works. How Newcastle was increasing was evidenced by the large number of houses recently built and in course of erection, for the accommodation of a population now close upon a quarter of a million in number. A large tract of land in the Sandyford district had in three or four years been covered with houses. West Jesmond estate was being rapidly built up, and in the past few days the Wingrove estate, at the west end of the city, had been laid out for nearly 600 houses. And the same thing was to be seen in other towns. If it were not for the prosperity of works such as were represented by this gathering there would not be such a demand for houses; and, as the representative of the chief municipality on Tyneside, it was fitting that he should acknowledge how much of their prosperity was due to them. He thanked Mr. Richardson for having coupled his name with the toast, and for the hearty manner in which they had received it.

"THE DINNER COMMITTEE."

The CHAIRMAN gave "The Dinner Committee," coupled with the name of the Chairman of the Committee (Mr. J. R. Fothergill). The amount of trouble taken in all the details in getting up an affair of this sort and the amount of courage required in its inception entitled them to their most hearty and sincere thanks. They could not repay them for the trouble taken; but they could show they recognised and appreciated it. He asked them heartily to drink to the health and well-being of the "The Dinner Committee."

Mr. J. R. FOTHERGILL, on rising to respond, said he could only express, on behalf of the Dinner Committee—and he must not forget their old friend, the Secretary (Mr. J. Duckitt)—their thanks to them for the very hearty manner in which they had responded to the toast proposed by the President. At the last dinner he expressed the hope that on the next occasion they should go one better. He hoped they would agree with him that in taking the Ball Room they had gone one better. They had rallied round them so bravely that night that he was afraid, if this increase continued, they would not have a building in Newcastle big enough to hold them. He was exceedingly sorry if there had been any difficulty in obtaining seats that night; but he was glad to see they had all found seats, and he hoped the precaution the Committee had taken in appointing stewards had materially assisted them in so doing, and that the members of the Committee had fulfilled

the duties imposed upon them to the satisfaction of all. He thought the Dinner Committee, if it might be congratulated on anything, was to be congratulated on obtaining such eloquent speakers as they had had the pleasure of hearing that night. He hoped that next year they would support them equally as well, and if they did, he was afraid that the Dinner Committee would have to establish some proviso that unless they applied for the tickets early they might be shut out. He again thanked them for the kind manner in which they had received the toast, "The Health of the Dinner Committee."

Mr. DUCKITT, in responding to calls for "The Secretary," said he was rather surprised that his friends had called upon him to speak, inasmuch as the Dinner Committee had put a veto upon speaking. All he had got to say was this, if they were all satisfied with their dinner, and enjoyed each other's society, and were pleased, he was very thankful.

DINNER COMMITTEE.

Mr. J. R. Fothergill (Chairman).
„ Robert Thompson.
„ Henry Fownes.
Mr. A. G. Schaeffer.
„ John Duckitt (Secretary).

This concluded the formal or set part of the programme. A conversazione followed, with vocal and mimetic contributions by Messrs. Joseph Nodder, E. L. Orde, W. Stevenson, Lewis Evans, G. Donkin, Jun., H. Ward, and J. Duckitt (Secretary).

NORTH-EAST COAST INSTITUTION OF ENGINEERS AND SHIPBUILDERS.

FIFTEENTH SESSION, 1898–99.

PROCEEDINGS.

THIRD GENERAL MEETING OF THE SESSION, HELD IN THE LECTURE HALL OF THE SUNDERLAND LITERARY SOCIETY, FAWCETT STREET, SUNDERLAND, ON FRIDAY EVENING, DECEMBER 16TH, 1898.

W. THEO. DOXFORD, ESQ., M.P., PAST-PRESIDENT, IN THE CHAIR.

The PAST-PRESIDENT explained that the President (Sir Benjamin Browne) had been called away, and the duties of presiding had fallen upon him that evening.

The SECRETARY read the minutes of the last General Meeting, held in Newcastle-upon-Tyne, on Friday, November 18th, 1898, which were approved by the members present, and signed by the Past-President.

The ballot for new members having been taken, the Past-President appointed Messrs. J. R. Fothergill and A. S. Swan to examine the voting papers, and the following gentlemen were declared elected :—

MEMBERS.

Balfour, Robert, Ship Draughtsman, 2, Beauly Crescent, Tynemouth.
Garmey, John, Engineer, 27, Queen's Terrace, Jesmond, Newcastle-upon-Tyne.
Sibson, Thomas, Engineer, Heworth Shore Engine Works, Felling-on-Tyne, R.S.O.
Hartness, Charles, Engineer, 2, Summerhill East, Sunderland.
Wight, Henry D., Electrical Engineer, 8, Windsor Terrace, Gosforth, Newcastle-upon-Tyne.

GRADUATES.

Chicken, Geo. Percy, Engineer, 28, Lawton Street, Newcastle-upon-Tyne.
Hay, John, Engineer Draughtsman, 44, Fern Avenue, Newcastle-upon-Tyne.
Piercy, Guy, Shipbuilder, 70, De Grey Street, Elswick, Newcastle-upon-Tyne.
Temperley, Nicholas R., Electrical Engineer, 4, Chester Crescent, Newcastle-upon-Tyne.

GOLD MEDAL AWARDS FOR THE FOURTEENTH SESSION.

The PAST-PRESIDENT announced that the Council had awarded the Shipbuilding Medal to Mr. Archibald Hogg for his paper on "The Comparison and Construction of Ships' Lines;" and the Engineering Medal to Mr. A. L. Mellanby for his paper, "The Effects of the Different Arrangements of Crank Angles upon the Economy of Quadruple Expansion Engines." The medallists were not present to receive the awards.

SUB-COMMITTEE FOR LLOYD'S.

The PAST-PRESIDENT intimated to the meeting that the term (four years) for which the representatives of this Institution had to serve on Lloyd's Technical Sub-Committee having expired, the Council had elected the following to represent the Institution for a further period of four years, viz.:—Shipbuilders—Mr. Robert Thompson, of Messrs. J. L. Thompson & Sons, Sunderland; Mr. Henry Withy, of Messrs. Sir C. Furness, Withy, & Co., West Hartlepool. These had been re-elected. Messrs. W. Boyd and F. C. Marshall having declined to stand for re-election owing to ill-health, the following engineers had been elected in their place:—Mr. John Tweedy, of Messrs. Wigham Richardson & Co., Walker on-Tyne, and Mr. J. W. Reed, of Messrs. Palmer's Shipbuilding and Iron Co., Jarrow-on-Tyne.

The discussion on Mr. M. W. Aisbitt's paper "On Some Features of the Repairs and Construction of Iron and Steel Ships" was resumed and closed.

A paper "On an Improved Method of Strengthening Copper Steam Pipes," by Mr. T. Messenger, was read and discussed.

DISCUSSION ON MR. M. W. AISBITT'S PAPER "ON SOME FEATURES OF THE REPAIRS AND CONSTRUCTION OF IRON AND STEEL SHIPS."

Mr. W. STEVENSON resumed the discussion on Mr. M. W. Aisbitt's paper. He said it was a shipbuilder's paper, and as he happened to be an engineer he did not think he could say much on it. The only feature he felt justified in discussing was the matter of the corrosion under the boilers. The cause was – as described—owing to the heat and the water underneath. Of course the cure had been undertaken by a great many people, who had modified it a little; but he did not think that it could be altogether cured. It seemed to him that the best way to get over the difficulty was to raise the boilers as high as possible above the tank top and ventilate beneath as much as possible. This had been done, giving very good results.

The SECRETARY read the following communications :—

CARDIFF, *March* 14*th*, 1898.

DEAR MR. DUCKITT,

I hope that the discussion on Mr. M. W. Aisbitt's paper "On Some Features of the Repairs and Construction of Iron and Steel Ships" will assist in drawing general attention to the deplorable and preventable waste now going on in the double bottoms of many vessels in the way of the boilers, and which would almost appear to have become to be regarded as an act of Providence, and left alone accordingly.

There is only one reason why the vessel should wear quicker here, and that is from the heat given off by the boiler. It being a matter of little or no difficulty to minimise this makes it the more astonishing how calmly many owners look forward to the time when this part has to be dealt with, and resign themselves to the expense and delay attendant thereon.

Unfortunately, under the boilers in the double bottom is, in a large number of vessels, treated as a sort of "no man's land." It does not belong to the deck department, and it as certainly does not belong to the engine room, and between the two we all know what happens. If the floors and frames were examined and cleaned periodically, there would be found little or nothing of the excessive waste now complained of, provided of course that the heat was properly guarded against. Many firms do this, but the great majority leave this part of the vessel severely

alone, satisfying themselves with the special periodical surveys as prescribed by Lloyd's Register, and blaming the material and builders for what might easily have been guarded against, at all events in its acutest form.

It has always appeared to me that the double bottom should be in some one's charge; and if this were properly attended to I am certain there would be much less cause for complaint than has prevailed for some years.

Oxidation goes on in all parts of the ship, but this is always seen minimised where care and trouble has been taken, and is exemplified in those vessels, especially iron and steel sailers, where a lot of chipping and painting has been done in the limbers and holds. Lagging the bottoms of boilers, wood platforms between boilers and tank tops, draught pipes and other contrivances are good preventives, but they must all be supplemented by the free use of the chipping hammer, scraper, and paint pot. The same arguments, I might add, apply with equal force to the coal bunkers, so many of which suffer from this premature decay.

Strong vessels have been built for some years of magnificent material, and the care or neglect of them only becomes apparent when their unprofitable period sets in, *i.e.*, when they are being superseded by more modern types; and it seems a pity that owners should be saddled at the very worst time of the life of the ship with the enormous expense and delay entailed by the repairs in question.

It may be that the cost of the labour expended on this part during the first eight to twelve years of a ship's life in preventive measures would more than outweigh the cost of the after repairs, but this is a matter for owners themselves and may account for the money spent afterwards. I can suggest no other reason.

Yours faithfully,

JOHN F. WALLIKER.

NEWPORT, MONMOUTH.

DEAR MR. DUCKITT,

I regret I will not be able to be with you at the meeting to be held at Sunderland on Friday evening, the 16th inst., to listen to the discussion on Mr. Aisbitt's paper.

It has, however, occurred to me that as one who has taken a great interest in the matter of deterioration of iron and steel in the vicinity of the main boilers of steam ships, I might be permitted to address a few lines to the members on this occasion.

I have no doubt in my own mind as to the deterioration of the plating on the top of the ballast tanks being caused by the heat from the boilers being transmitted through the plating, which, in its turn, acts on the surface of the small accumulation of water left in the tank and sets up a sweat or vapour, and my somewhat lengthy experience in these matters goes to show, that whenever heat is applied to one side of a plate and moisture on the other side of the plate, the deterioration is most rapid. For instance, a large number of our members will have noticed that the plates next the boilers in the bunker sides are usually found in good order on the boiler side, whereas on the opposite side the corrosion is most disastrous, even the stiffening bars are often wasted completely away in eight or even six years. This is no doubt caused by the bunker side of the plating being kept damp with the moisture from the coal and the heat from the boiler on the opposite side. This is even noticed to no small degree in the case of donkey boilers when placed in the vicinity of the main boilers, the shell plating next the latter always goes more rapidly than in any other part of the shell. Now, if such is the case, it naturally follows that the one thing to aim at is to get rid of the moisture inside the ballast tank where they are so adversely affected, and if this is done I think the destruction would be reduced to a minimum. One ballast tank has come under my personal observation that has been thoroughly ventilated since the ship was built, and when she passed Lloyd's No. 1 special survey test, holes were drilled in the tank top immediately under the boilers, when it was found to have wasted very little over $\frac{1}{32}$ inch in that time.

I take this opportunity of thanking Mr. Aisbitt for his paper, and trust the somewhat lively discussion will be continued at the next meeting.

Yours faithfully,

C. LANDRETH.

Mr. PERCY WILLCOX observed that Mr. Walliker spoke of the boiler room tank as "no man's land" in the ship. That was not his opinion. It came distinctly under the engineering department, and ought to be looked after by the engineers. They often saw vessels with the paint work of the engine room and stokehold very bright and clean, but on going underneath the platforms they found everything in a state of rapid corrosion, and between the boilers, on the tank top, a conglomeration of firebars and bricks which made it impossible for anyone to examine and keep the tank tops clean and protected by cement. If a good deal of the

time occupied by the firemen and trimmers in applying coat after coat of paint to the engine room above the platforms were spent in thoroughly cleaning the boiler room tank and cement washing it, both inside and out, at frequent intervals, they would not hear so much about the rapid decay as they did at present. They were all agreed as to the cause of the corrosion, and the difficulty could be easily remedied if shipowners, when buying a vessel, would pay for cleading the bottom of the boilers thoroughly and fitting a couple of uptake ventilators at each side of the casings, reaching well down between and at the sides of the boilers, in order to get rid of the accumulation of heat. Mr. Landreth's system of tank ventilation and Capt. Danby's system of entirely covering the uptake casings with non-conducting composition had both proved very effective, the former preventing the effects of heat radiation on wet surfaces, and the latter preventing excessive radiation taking place. They must go to the root of the evil if they wished to eradicate it: the heat must therefore be prevented from reaching the plates, and until shipowners would pay for thoroughly cleading the boilers and providing ventilation the destruction must go on.

Mr. George N. Arnison said that there was not much that he could add to the discussion. There was, however, another way of treating tank tops in the boiler space that had not been mentioned which he had adopted in a vessel that he had to do with, viz., protecting the upper side of the tank top with about 4 inches of concrete. As the practice of placing firebars and such like on the tank top under the stokehold plates was carried on, having the concrete covering obviated the damage that might otherwise occur. Protection was also thus afforded against any action that might be occasioned by the presence of bilge water. He (Mr. Arnison) agreed with those who had previously taken part in the discussion, that the boilers should be kept a good height above the tank top, and along with the protection of the upper side of the tank such an arrangement would at least largely assist to prevent deterioration that occurred from corrosion. The steamer in question was scarcely old enough to be cited as conclusive evidence, but so far the concreting seemed to have proved satisfactory. There was no doubt that ventilation was most necessary wherever there was damp accumulating, and that was one of the most important points in connection with the question of preventing corrosion. There were other points besides the question of tank tops in boiler spaces considered in the paper. Beam knees were mentioned at some length. He (Mr. Arnison) agreed

with those previous speakers in regard to the curious proposal of having so many rivets in a beam knee, as shown in Fig. 4 (Plate I.). He certainly believed in having sufficient rivets, but there were twice or even thrice as many as necessary, in his opinion. At the same time he agreed with many of the observations in the paper regarding beam knees, more especially as to attaching knees by welding. The paper had no doubt aroused considerable adverse criticism, owing partially to the writer having claimed a certain position with regard to the introduction of the cellular bottom, but at the same time it was one of those papers which lead to useful and practical discussions.

The PAST-PRESIDENT expressed his regret, from the position he was in that night, that he was not at the previous meeting; but, in looking over the discussion which took place, it appeared to him that the two main points taken up were the questions of the cellular bottom in steamships and the corrosion of the tanks under the boilers. As regarded the cellular bottom, he was inclined to take the view that probably no one individual deserved the whole credit for the cellular bottom as now constructed, and that several gentlemen deserved credit for the steps taken in the developments which had taken place. This development had been an enormous improvement, and they on the North-East Coast had benefited largely by it. As regarded the difficulty with the cellular bottoms or tanks under the boilers, he took it there were two points involved: one was the heat from the boiler, and the other was the difficulty with the water in the tank. According to the paper and the discussion, it seemed to be, up to the present, practically impossible to do away with either the one or the other entirely. If they could absolutely prevent the heat from the boiler touching the tank top, as suggested by Mr. Willcox, the water in the tank would do no more harm there than elsewhere. On the other hand, if they could absolutely dry the tank every time the water was taken out, the heat would do no harm. Of course many individuals were doing what they could to minimise those two points as far as possible, and so save the corrosion and the enormous cost resulting from it. He (the Past-President) did not think anyone had referred to the question of galvanizing the plates and floors under the boilers. His firm had done that in a great many steamers, and, as far as they knew, with absolute success. He was rather sorry that this remedy had not been referred to earlier, as they might have heard of others who had tried it and had the benefit of their experience. It was simply a question for the owners whether they

would pay the extra cost; but if it saved them renewing that part of the ship in four years, as had been mentioned in one case, or eight years, taken as the average, it would be a wise and economical safeguard. As Mr. Aisbitt was not present that evening, the discussion would be closed and his reply be reserved for the next meeting. He would now move a vote of thanks to Mr. Aisbitt for his paper. It had certainly caused a very good discussion.

This was carried by acclamation.

ON AN IMPROVED METHOD OF STRENGTHENING COPPER STEAM PIPES.

By T. MESSENGER.

[Read before the Institution, in Sunderland, on Friday, December 16th, 1898.]

It is with some diffidence that the writer offers to the Institution a paper on this subject, but he thinks that the question is one of considerable importance, taking into consideration the high pressures now used, and hopes that it may prove of sufficient interest.

In past times, when lower pressures were used and lighter pipes were necessary, the longitudinal brazed seams could be more satisfactorily made by means of the carefully brazed dove-tailed lap system, as shown in Fig. 1 (Plate II.), than is now made by the brazed lap seam without dove-tailing.

The writer is of the opinion that were it not for the much greater expense involved in making the dove-tailed lap joint in dealing with the greater thickness of the material necessary, the old system would still be preferable in making a stronger and more reliable joint.

In either case brazed seams will be undoubtedly strengthened by means of some system of bands or straps placed round the pipes at suitable intervals, and should any defect develop in a particular part of the joint the effect of such bands will be to confine the defect locally and prevent the danger of a long rent and possibly disastrous consequences.

Several methods of strengthening pipes are in use, such as binding them with a continuous coil of wire from end to end, placing separate bands of wire on at intervals, the wire being shrunk on by heating and the ends of the wire jointed by twisting them together, and occasionally hoops have been used, secured by means of lugs and bolts.

The writer having had occasion to deal with pipes of considerable size, and for which it was necessary to obtain a higher factor of safety, has adopted with success the system herein described.

This consists in fitting round the pipe, as shown in Fig. 2 (Plate II.), a series of bands of wrought iron or other suitable material and placed at intervals of, say, 6 inches apart.

In the example shown, the copper pipe was 12 inches diameter, and

No. 3 W.G. thick, and had been twelve years in use subject to a working pressure of 110 pounds per square inch, when it began to show defects. The bands fitted were each made in halves, each half being secured to the other by means of cotters passing through single and double-eyed joints. The said bands were placed 6 inches apart between centres, and the section of the flat parts of same was 2 inches by $\frac{3}{16}$ inch, and the strength of the parts at the joints and cotters was made 10 per cent. in excess of other parts.

The original factor of safety by Board of Trade rule was 11·3, and after fitting the bands this was increased to 15·7, or nearly 40 per cent. more, which was considered sufficient in this particular case.

It will be noticed on referring to the figure that the pipe in question has a branch, and it will be seen how conveniently such bands can be adapted and fitted around the flanges of branches, and so materially strengthen the main pipe.

The cotters used in fixing the separate halves of the bands together on being inserted in the eyes of the single and double ends are fixed in place by means of a special tool, Fig 3 (Plate II.), which has vice-like jaws.

The use of this tool enables the cotters to be gently forced into position without having to use either part or the hammer for tightening up, and it can also be used for removing the cotters when necessary for repairing or testing the pipes.

The bands can by this means be secured to the pipes when the latter are in place or otherwise.

In strengthening pipes where bends occur the section of the band is made round, as shown in Fig. 4 (Plate II.).

Although in new work steel or iron pipes are now being used, there are a great number of vessels having existing copper steam pipes which may require strengthening owing to their becoming weakened by age, and in such cases these bands can be easily applied.

In the case of copper pipes the increased temperature due to the higher pressure, causing a reduction in strength of the material, may render additional strengthening by such means desirable.

The writer thinks that his method has advantages over other methods, as the pull of the cotter joint is more nearly in the centre of the band than can be obtained by any other mechanical means, being practically equal to a solid band.

It need scarcely be necessary to say that the use of these bands is only intended to deal with the longitudinal strength ; the question of the circumferential strength of pipes at their flanges is another matter altogether.

DISCUSSION.

Mr. J. R. FOTHERGILL, in opening the discussion, said the paper, although dealing more particularly with the special arrangement the author desired to place before the meeting, yet the subject was one of very deep and great importance at the present day, having regard to the increase in boiler pressures. He remembered some two or three years ago a very interesting discussion on this very subject, which took place at the Institution of Naval Architects, in which valuable information was given that had been obtained from tests by some of the principal firms in the kingdom. He did not know whether they had had the pleasure of reading Prof. Arnold's recent report upon copper steam pipes. The Professor had, by request of Lloyd's Committee, made a most searching investigation as to the cause of damage to copper steam pipes, and had found distinct evidences of decomposition of the brazing, which was largely due to the use of inferior oils for cylinder lubrication, swabbing rods, etc. The application of the bands described and shown by the writer of the paper would, undoubtedly, materially strengthen the pipe, but he was afraid it would prove a costly process and give no additional support at the neck of the flange, which, in his (Mr. Fothergill's) experience, was that part of the pipe, particularly with high pressures, where they had most trouble. He was of the opinion much of the "giving" at the flanges, especially in modern cargo steamers when in ballast, was due to excessive vibration and shortness of steam pipes. Some few years ago some firms he knew had entirely given up expansion joints and trusted entirely to bends and elbows, but experience had shown in short pipes this was a mistake, and they had to return to the expansion joint. Personally, he was strongly in favour of steel main steam pipes, and he thought they were within measurable distance of their general adoption. Experience had removed much of the prejudices against steel, and shown such pipes could be used with the greatest satisfaction. He thought Lloyd's had acted very wisely in requiring the annealing and testing, every two or three years, copper main steam pipes; he, for one, had adopted this course for some time with most satisfactory results. In conclusion, he desired to thank the author for his paper, as it dealt with a most important subject, and he hoped they would have a good discussion.

Mr. HUGO MACCOLL agreed with Mr. Fothergill as to the importance of the subject treated of in the paper, namely, the safety of

large steam pipes. He referred to the fact that this subject had been discussed by the Institution of Naval Architects, as well as by Mr. Nisbet Sinclair in a paper read some years ago before the Institution of Engineers and Shipbuilders in Scotland, in which the results of some very important experiments made in the Lancefield Engine Works were carefully tabulated and analysed. He thought this paper was going back when the writer advocated brazed pipes up to 12 inches diameter. He thought that a retrogression from the modern practice, which was to make the pipes solid drawn. Where solid drawn pipes of sufficient diameter could not be had, he advocated the use of two or more pipes of such sizes as could be got to make up the area required. In the experiments already referred to, it was found that while the part of the pipe actually brazed was as strong as the original plate from which the pipe was made, part of the plate adjacent to the brazed part was weakened, but whether that was due to hammering or to chemical action he was not prepared to say. He believed the bands illustrated in the paper would cause trouble instead of curing it, owing to the different expansions of the different metals employed. The question of brazing the flanges to the end of the pipes did not come into the present discussion, but there were several methods of getting over that difficulty. While he did not agree with the practice referred to in the paper, he had listened to it with considerable pleasure.

Mr. Percy Willcox said it seemed to him they were getting beyond what the paper contained—"An Improved Method of Strengthening Copper Pipes." He took it that the clips were only to be used for strengthening defective copper pipes in cases of emergency, such as a fractured pipe of a marine engine at sea, and not for use when manufacturing a new pipe. One feature that struck him about these clips was that there was no mention of what draw was allowed on the cotters, and that was, in his opinion, of considerable importance, as it determined to a great extent what increase or decrease in diameter of the pipe could be allowed for a standard size. For instance, a 6 inch pipe might be $\frac{1}{8}$ inch thick or $\frac{1}{16}$ inch thick, depending on the pressure inside it, and for the clip to be of use as a stand by the draw on the cotters should be suitable for taking either sizes. Then, again, if the taper on the cotters were fine there was a chance of the pipe being injured by excessive local compression when the cotter was being driven home with the special tool shown, which seemed to be capable of exerting a large amount of power. He should also like to ask the author if any trouble had ever been

experienced through the cotters coming loose through differences of expansion, when the pipe was cold and hot, or through vibration. With reference to Mr. Fothergill's remarks about steam pipes being affected by vibration, he had seen a case that day where the main steam pipe had been necked through and also the main discharge pipe, entirely due to excessive vibration caused by the racing of the engines.

The PAST-PRESIDENT—At the flange?

Mr. WILLCOX—Yes, about one-third round at each flange.

Mr. W. STEVENSON said, so far as he could see, he thought the writer of the paper intended it to apply to old, not so much to new, pipes. So far as mending pipes that had some tendency to give way, he thought it seemed to be very good, although he agreed with the first speaker that it was likely to be very costly. Anything he had against it was that the cotters would either be too tight or too slack on the pipe, as the pipe was not always of the same uniform diameter all along. He would have liked if the paper had gone a little further, and brought in new pipes, for there had been a good deal of discussion on the higher pressure now in vogue and pipes to stand that pressure. He thought it was generally agreed that copper pipes, if made in a proper manner, were quite safe for the work put upon them; but now, with keen competition, very often pipes were not made in the strongest manner possible; and also they had the human element coming in, too, where one workman might not be able to make as good a job as another; but copper pipes, made by good workmen, he thought, could not be beaten. Now, solid drawn pipes were mostly used, but he did not think they could get them solid drawn up to 12 inches. They were indebted to the writer for bringing this paper forward.

Mr. GEORGE N. ARNISON reminded the members present that at the last exhibition held in Sunderland there was on the stand of the Broughton Copper Company an important arrangement of steam pipe flanges; and in view of the frequent failure of steam pipes in the wake of the flanges, it occurred to him that if the flanges were made as they were by the Broughton Copper Company he did not think such failures could happen, as the flange was part of the pipe itself, not being brazed on, but turned over from the solid copper taper strengthened ends by hydraulic pressure, so as to form a continuous portion of the

pipe. He did not know whether any gentlemen present had had experience with copper pipes having their flanges so formed, but it was evidently a practical arrangement, and overcame the difficulties arising from the heating of the copper when brazing, and to the subsequent deterioration that, according to Prof. Arnold, takes place in brazing.

The PAST-PRESIDENT asked whether there was any material reduction of the thickness of the pipe at the bend?

Mr. ARNISON—There was none. A portion of a pipe was shown cut through both vertically and horizontally, and showed practically an exact uniformity of thickness in the material.

Mr. FOTHERGILL—Were the pipes of drawn copper, or made on the system of deposited copper?

Mr. ARNISON said he thought they were drawn. He believed that the Broughton Copper Company did not adopt the depositing system.

Mr. JAMES THOMPSON (Sunderland) said that he had had experience of the arrangement of flanged pipes described by the last speaker, which had for years been fitted by the Wallsend Slipway and Engineering Company, and had found them satisfactory. The failure of steam pipes was largely due to the severe strains when a vessel was running lightship, and the failure in the wake of joints was not owing so much to defective brazing as to the weakness of a part near to two rigid positions. He never adopted steam pipes above 9 inches in diameter, preferring to have duplicate pipes to using pipes with seams.

The discussion was then adjourned till the February meeting to be held in South Shields.

NORTH-EAST COAST INSTITUTION OF ENGINEERS AND SHIPBUILDERS.

FIFTEENTH SESSION, 1898-99.

PROCEEDINGS.

FOURTH GENERAL MEETING OF THE SESSION, HELD IN WEST HARTLEPOOL, ON SATURDAY, JANUARY 21ST, 1899.

VISIT TO THE CENTRAL MARINE ENGINE WORKS, WEST HARTLEPOOL.

By the kind invitation of Messrs. Sir Wm. Gray & Co., the members visited the Central Marine Engine Works, West Hartlepool, on Saturday afternoon, January 21st, 1899.

The company was so large, headed by the President (Sir B. C. Browne), that the railway authorities provided a special train from Newcastle, and the visitors. conveyed in vehicles from West Hartlepool Station, were conducted round the works by the manager (Mr. Wm. C. Borrowman), Mr. A. M. Henderson (works superintendent), Mr. J. B. Williams (chief draughtsman), Mr. H. C. McBeath (secretary), and other officials.

The Central Marine Engine Works were laid out in 1883 by the late Mr. T. Mudd. The machinery is driven by steam-power and the artificial lighting is electric. The capacity of the works can be understood by the fact that since the 1st of August last the firm had turned out twenty sets of marine engines, averaging 2,000 indicated horse-power. The output last year was 80,000 horse-power, and the expectation this year is to build three or four engines every month, considerable extensions having recently been completed.

The works occupy approximately a triangular site which has a frontage of 830 feet along the quay of the central basin, and has an area of about 8 acres. There is a direct railway and sea communication, and new vessels from any of the local shipbuilding yards can reach the quay at the front of the works without having to go out of the dock system into the open sea. A set of 80 ton hydraulic sheers, 110 feet in height, are conveniently situated on the quay. The forge and blacksmiths' department, as well as the pattern shop, plumbers' shop, and store are in the background. The forge includes in its equipment two 15 ton steam hammers, each provided with four 15 ton jib cranes. It is also noteworthy that the waste gases from the forge furnaces are utilised for heating the water by which the boilers are fed. There have been many instances of great despatch in executing work in this department, more especially when propeller shafts were required to be sent out to vessels which had happened mishaps. For this purpose the forge department is specially equipped and self-contained, having all the machine tools necessary for finishing shafting and other forgings ready for their being fitted in place in the ship. Within the last two or three years a drop-hammer forging plant has been added, capable of dealing with forgings of from 1 lb. to 1 cwt., thus effecting a considerable reduction in hand labour. In connection with this plant liquid fuel furnaces have been adopted for heating the material.

Amongst the machines (which are all of the most modern design) specially noticeable is a tool for boring out two parallel holes simultaneously. The castings and forgings for the new set of five-crank engines, which the owners of the s.s. "Inchmona" are having built for a sister ship to that vessel, were to be seen in various stages of progress as the visitors went round the works. The s.s. "Inchmona" was the first vessel fitted with Mudd's patent five-crank quadruple expansion engines, and in many respects the new vessel and her machinery will be a duplicate of the "Inchmona," although it has been decided to adopt a working pressure in the boilers of 260 lbs., which is 5 lbs. in excess of that in the last-mentioned vessel. Another important contract that is in hand is a set of powerful twin-screw triple expansion engines—the first of the kind undertaken at the Central Marine Works—to be fitted in a Wilson liner. These engines will have an aggregate power of 5,000 indicated horse-power. The hull of this vessel, as well as that of the sister vessel to the "Inchmona," is being constructed by Messrs. Sir William Gray & Co., Limited, and is 455 feet in length, 52 feet beam, and draught 26 feet 9 inches, at which the displacement will be nearly 14,000 tons.

The boiler shops were also visited, and much interest was displayed in the mode of building the shell of the boilers, and in the plant. The circumferential part of the shells consists only of two plates, and for boilers up to 13 feet diameter the end plates are in one plate only, the whole shell being thus completed by four plates only. There are consequently no seams or rivets under the bottom of the boiler. Owing to the fact that the shell plates are flanged to take the flat end plates there are no rivet heads protruding from the bottom at either of the ends. The bending machine used is capable of bending to a circle plates 12 feet in width and up to as much as 2 inches in thickness; and there is a correspondingly powerful flanging machine. A circular annealing furnace of large dimensions was erected a few years ago to accommodate the whole shell of the boiler, after the work of welding and flanging had been completed.

The large company were entertained by the firm, and a vote of thanks was subsequently accorded on the motion of the President, seconded by Mr. Fothergill, for which Mr. Borrowman (the manager) responded.

NORTH-EAST COAST INSTITUTION OF ENGINEERS AND SHIPBUILDERS.

FIFTEENTH SESSION, 1898-99.

PROCEEDINGS.

FOURTH GENERAL MEETING OF THE SESSION, HELD IN THE LECTURE THEATRE, TECHNICAL COLLEGE, WEST HARTLEPOOL, ON SATURDAY EVENING, JANUARY 21ST, 1899.

SIR BENJAMIN CHAPMAN BROWNE, D.C.L., J.P., PRESIDENT, IN THE CHAIR.

The SECRETARY read the minutes of the last General Meeting, held in Sunderland, on 16th December, 1898, which were approved by the members present, and signed by the President.

The ballot for new members having been taken, the President appointed Messrs. S. Hunter and A. S. Swan to examine the voting papers, and the following gentlemen were declared elected :—

MEMBERS.

Fernandes, Charles B. L., Electrician, Sir W. G. Armstrong, Whitworth, & Co., Ltd., Elswick Ordnance Works, Newcastle-upon-Tyne.

Gates, George, Engineer, 8, Scafell Terrace, York Road, West Hartlepool.

Toomer, C. R., Engineer, Messrs. C. R. Toomer & Co., Engineers, Tyne Dock.

ASSOCIATES.

Borrie, Walter, Secretary, Messrs. Blair & Co., Ltd., Stockton-on-Tees.

Temple, George, Commercial Manager to Messrs. H. Watson & Co., 8, West View, Wallsend-on-Tyne.

GRADUATE.

Gravell, Arthur, Electrical Engineer, 14, Hedley Street, Gosforth, Newcastle-upon-Tyne.

THE VISIT TO THE CENTRAL MARINE ENGINE WORKS, WEST HARTLEPOOL.

The PRESIDENT said his next duty was an exceedingly pleasant one, it was to propose a most hearty vote of thanks to Messrs. Sir Wm. Gray & Co. for the kind way they had received them that afternoon, for their kind hospitality, and for the courtesy and liberality with which they had shown them the Central Marine Engine Works. He thought it was no small matter that they should have had the advantage of seeing what was known as one of the best laid-out works. For the many it was of very great value to see well laid-out works, and to ask, "Why is this put here?" and "Why is that put there?" and study and compare arrangements and see the reason for everything, and, if possible, what could be improved. From what one could judge, they were certainly the most interesting works, both as regards machinery arrangement and production, indeed the whole provision is such as to make them the most perfect works almost to be seen anywhere. He must ask them to join in the hearty vote of thanks to the firm. He was exceedingly sorry his friend Mr. Baines was not present. He was absent at Harrogate through ill-health. It was always a great pleasure to him to meet Mr. Baines, who would, he was sure, regret not being there to meet them. In his absence they had been guided most admirably and kindly by their friend Mr. Borrowman. Mr. Borrowman had not been long amongst them; but he came from the Clyde, which had been to them so often their pattern example in all connected with shipbuilding and marine engineering, and he was quite sure Mr. Borrowman received amongst them a hearty welcome. They hoped he would long be spared to take a leading part in the marine engineering of the North-East Coast. He proposed a hearty vote of thanks to Messrs. Sir Wm. Gray & Co., coupled with the name of Mr. Borrowman.

Mr. J. R. FOTHERGILL (Vice-President) said it was with very great pleasure he rose at the invitation of the President to second the vote of thanks so ably put before them. He thought they must all feel gratified at the extensive and interesting works which Mr. Borrowman that afternoon had so kindly shown them over. As a resident he was conversant with the class of work turned out, and he was sure they would support him in saying it was of the best and second to none.

He also felt proud in residing in a district that could boast of such works as they had in the Hartlepools. They had another cause for pleasure and satisfaction in the fact that as soon as Mr. Borrowman came to reside in their district he became a member of the Institution; and he felt sure as soon as he became conversant with its association and influence he would be only too delighted to give them a paper. He was sure they all deeply regretted that illness prevented Mr. Baines being with them that afternoon, but wished him speedy recovery and early return to the works.

The vote was carried unanimously by acclamation.

Mr. W. C. Borrowman, in reply, said he had hoped that one of his principals would have been there to acknowledge the vote of thanks so kindly and gracefully proposed by their President, seconded by his friend Mr. Fothergill, and accepted by the members of the Institution. Unfortunately Mr. Baines, his friend and colleague, had had to leave West Hartlepool for rest and change for the purpose of recovering his health. He asked him, however, as did the other directors, to express their great regret at not being able to be present with them that night. Would they permit him, in their name, to thank them for the kind way in which reference had been made to the firm, and to say how delighted every one of the staff had been that day to have them with them in the Central Marine Engine Works. To those who visited the works for the first time that day there must have been much to interest and instruct them; and they would see every evidence of careful design and forethought on the part of his predecessor (the late Mr. Mudd), and of the liberal generosity of his directors. He further thanked them for the kind references to himself. It was another manifestation—perhaps a more comprehensive one—of the general and unstinted kindness he had met with since he came amongst them. He appreciated the kindness very much, and hoped he would always deserve it.

Mr. M. W. Aisbitt's reply to the discussion on his paper "On Some Features of the Repairs and Construction of Iron and Steel Ships" was taken as read.

Mr. Tom Westgarth read a paper on "Works' Organisation." The discussion was opened and adjourned.

DISCUSSION ON MR. M. W. AISBITT'S PAPER "ON SOME FEATURES OF THE REPAIRS AND CONSTRUCTION OF IRON AND STEEL SHIPS."

The PRESIDENT said if there was to be no further discussion on Mr. Aisbitt's paper, and as Mr. Aisbitt was unable to be present, it would be almost as well to take his reply as read, for they could study it more carefully in their *Transactions*. He thought, perhaps, that would be the most satisfactory course, but it was entirely in their hands.

It was agreed as suggested by the President.

MR. AISBITT'S REPLY.

DEAR MR. DUCKITT,

I regret I shall not be able to attend the meeting in West Hartlepool, and must ask you to submit the following reply to the discussion on my paper "On Some Features of the Repairs and Construction of Iron and Steel Ships."

I must thank the various gentlemen who have taken part in it for their very fair and candid criticism of sundry matters therein. I am sorry I cannot endorse Mr. M. C. James's opinion that an exclusive (?) association with repairs tends to cloud, if not to dwarf, one's constructive ideas, as it has always been my experience that those who are fortunate enough to be in a position to see the various sides of a question—or rather, perhaps, the various designs and ideas of ship construction, originating not only from the Tyne but from all parts of the kingdom, together with the result of such ideas after being practically tested—are more likely to have their minds opened and enlarged, than would be the case had they been pursuing one particular idea of construction or the uses thereof. I am glad to note that Mr. James agrees with me as to the unsatisfactory nature of slab beam knees, and prefers a plate knee soundly riveted to the beam. As to the extraordinary arrangement of rivets to which he refers, I am sure Mr. James, from his experience, will allow of there being such a thing as a draughtsman's as well as a poetic licence. I note he also agrees with me as to H section pillars forming very effective structural members, which is, I think, the point to be aimed at, and I do not think that in the case of carrying fine bale goods much objection would be found to same.

As regards web frames, I have of course read Mr. Scott Russell's great work, but, so far as concerns what is stated to be the knobs in the cane, *i.e.*, the junction of the longitudinals to the verticals, those are the very points where we find, in practical experience, most attention should be paid to sound riveting.

Mr. James is perfectly right as to the tendency to build ships on the deep or girder frame principle rather than the web frames; but I am afraid that the tendency is more with a view to reducing the internal gross tonnage than to render the vessel actually stronger or more fit to carry heavy deadweights and withstand straining in heavy weather. Concerning the claim which Mr. James says I have put forth regarding the double bottoms, this I will refer to later when treating with Mr. Hunter's discussion. The corrosion referred to is practically confined to water ballast tanks in way of the boilers, and to a slighter degree sometimes to those in cellular bottoms immediately before and abaft this space.

As regards the difficulty of obtaining sections as I have shown, I think that there need be no fear on this point. The intercostal that I have shown, not longitudinal, was such as is thought necessary for an actual vessel of the same size having deep floors on every frame.

Since addressing you I have received particulars of a vessel built on the Clyde in December, 1889, somewhat on Mr. Hunter's plan on the bracket system, having angle irons 14 by $3\frac{1}{2}$ by $\frac{9}{20}$, so that if it was possible to obtain such sections, I have no fear of being able to obtain an ordinary bulb angle iron 9 or 10 inches deep.

In Mr. Fothergill I am glad to have a critic who has not only had considerable experience in the construction of vessels but also, what is perhaps more valuable, an experience of the working, both physically and practically, of all classes of steamships after they have been in use for several years. Mr. Fothergill is of the opinion that the main source of the corrosion of the internal structure of the vessel in the double bottom in way of the boilers is from heat of same. Undoubtedly this, to a certain extent, is so, but, remembering that the particular floors in discussion are generally situated at the centre of the vessel's length, and are therefore in the position of the greatest strain, and have to endure any vibrations caused therefrom, I think that two causes must be added together to arrive at the result, *i.e.*, first, the heat of the boilers, and secondly, the light scantling of the floors which allows a certain amount of vibration to take place. I thoroughly concur with Mr. Fothergill in the desirability of keeping the boilers well up above the tank tops, and ventilating the tanks as far as possible; also, it would, undoubtedly, be a

great advantage if some simple method of draining the tanks could be designed on the lines of my friend the late Mr. Fred Wailes. I also agree with him on the undesirability of boxing up the boilers underneath, preventing a thorough ventilation, the modern tendency now being to have everything as open and clean as possible, and avoid as far as can be any hidden nooks for dirt and damp to accumulate.

I must thank Mr. Fothergill for referring me to Mr. McGlashan's interesting paper on the ballasting of modern cargo steamers, and I must compliment that gentleman on the very successful issue of his ideas as mentioned in the shipping papers recently.

I note Mr. Thearle agrees with me that the mode of slab beam knees is inferior to the turned or fitted knee, but is of opinion that possibly the beams I referred to may have been done by inefficient workmen. However, I am afraid that this cannot be so as some of the vessels referred to were built by some of the highest authorities on naval architecture in the kingdom and of recent date. I am pleased to observe that Mr. Thearle is at one with me as to H section pillars spaced further apart, and I am also glad to think that he agrees with me as to the necessity of attention being paid to the connection of the web frames to the tank sides.

As regards Mr. G. B. Hunter's remarks, I am glad to note that he agrees with me that it is exceedingly desirable that the present type of cellular bottom ships should be more accessible in the tanks, and also that the present corrosion that is taking place is a matter of serious importance. I further agree with Mr. Hunter as to the necessity of distinguishing the various systems of double bottoms under their proper names.

Referring to the somewhat personal matter as to any little credit which I may claim in connection with the introduction of a given type of construction of the water ballast tanks, which is, after all, a matter of little importance to shipbuilders in general, but is of great interest to myself, I may perhaps be allowed to give my own version of what are the grounds upon which I think I have the right of claiming to being connected with the present construction of water ballast tanks. In the first place, it is thoroughly well known that the Government constructed, or ordered to be constructed, several vessels on the longitudinal cellular bottom system many years before it was introduced into the mercantile marine, the first that I remember being some of the turret ships built or designed at Messrs. Palmer's about 1872.

Reference has been made to a merchant vessel constructed in Italy on the cellular principle in 1874, of which I have heard some accounts

but have never yet seen the plans. Doubtless the late Mr. Davey, once manager for Messrs. Charles Mitchell & Co., who was about that time at Leghorn, may have had something to do with this vessel. None of the vessels constructed by Messrs. Palmer up to the year 1873 had water ballast tanks built on the cellular construction. The two vessels to which Mr. Hunter refers were the oil steamers "Vaderland" and "Nederland," built for a Dutch firm, with inner and outer skins, with intention to carry oil in bulk. In 1872-73, when at Messrs. Palmer's, I was much struck by the fact that the older type of vessels having the machinery placed aft with McIntyre girders running continuously fore and aft, never showed any signs of straining amidships in way of the butts, while those of modern date with the machinery placed amidships, in which space the girders were discontinued after a very short time, showed signs of working in way of the stokehold, where the longitudinal strength was least. It then struck me that it would make a good form of construction to carry those girders continuously through the engine and machine space, and, in order to secure a deduction from the tonnage measurement, to carry them down on to the shell plating, fitting intercostal floor plates on alternate frames, the then Act of Parliament stating that where one-half the floors are deep floors the measurement for tonnage is to be taken from the top of those floors. This plan I worked out, and completed afterwards when engaged by Messrs. Austin & Hunter, and, in doing so, if I remember rightly, consulted both Mr. Hunter, Mr. McIlvenna, and my assistant, Mr. Robson, on the matter. The workmen also in the yard were well aware of the idea at the time. The principal point to which I would draw your attention as regards this plan is that the longitudinals were continuous fore and aft, and the floors were in one piece from the tank top to the vessel's shell spaced 4 feet apart. Whether or not Mr. Hunter had designed a somewhat similar tank on the *bracket* principle some years previously at Messrs. Pile's is a thing of which I am not aware, I certainly never heard of it. After leaving Messrs. Austin & Hunter's in the month, I think, of March, 1876, Mr. Robson sent me a pencil tracing of a proposed double bottom vessel which he stated they were going to build. This, if I remember rightly, had brackets from the ordinary frames to the longitudinals and tank top and deep intercostal floors spaced some 20 feet apart. It was certainly the first I had seen of the bracket system. This plan was adopted in the case of the "Fenton" and another steamer, which was, I think, completed about October, 1876. In the same year, if I remember rightly, Mr. Martell read a discussion on this tank, together with others

before the meeting of Naval Architects, previous to which I had claimed the idea of the adoption of longitudinal cellular double bottoms for merchant ships, and, I think, pointed out the difference between Mr. Hunter's bracket frames and my own idea of a solid floor as regards the exemption from tonnage. Mr. Hunter is quite correct in stating that Mr. Denny tested the point some months afterwards with the Board of Trade, but it was on the basis of my idea, and not of his own with the brackets, otherwise the Board of Trade would, of course, have won on the point that the bracket was not a solid floor. The immediate adoption of the new type of double bottom was not, as Mr. Hunter states, on his, the bracket system, but on the alternate deep floor plan, which ultimately adopted itself into the present thin floors on every frame with a single intercostal as shown. I think if Mr. Hunter will refresh his memory he will admit that the plans of the "Fenton" were not prepared until some months after I had left, and was in the employment of Sir E. J. Reed at Pembroke Dock. I quite appreciate and endorse Mr. Hunter's witticism as to George IV. and the Duke of Wellington, to compare great things with small, but though I desire to have a fair share of credit for that which I have produced, I could not for a moment think of putting myself into Mr. Hunter's place as regards the time I had the pleasure of being under him. It must, therefore, I think, be quite evident to us all, that, if I may be allowed to say so, it was he who was George IV. and I the Duke of Wellington.

I note Mr. Walliker emphasises the necessity of keeping the water ballast tanks under the boilers thoroughly clean, with which, of course, we all agree; but the deterioration to which I referred is not, I think, merely a question of it being caused through want of cleanliness, but also, I consider, of the vibration of thin floors.

Mr. Landreth refers to the corrosion which takes place in the bunkers as being caused through moisture, but I am inclined to think that the chemical properties of the coal has a great deal to do with the matter in that particular place.

Mr. Doxford's reference to his firm having used galvanized plates and floors under the boilers is certainly very interesting. So far as these parts are concerned, this would practically dispense with all corrosion.

When the discussion on my paper began I felt somewhat disappointed that the object I had in view, viz., the ventilating of a very important subject in connection with the life of steamers, appeared to have been overlooked in favour of the personal element, but the final stage of the discussion, by men who have to deal actually with the

subject in the ordinary routine of business, and who have given us their views thereon, makes me feel that the primary object of the paper has not been entirely overlooked, and I have to thank you for the consideration you have shown me.

Yours faithfully,

M. W. AISBITT.

ON WORKS' ORGANISATION.

By TOM WESTGARTH.

[Read before the Institution, in West Hartlepool, on Saturday, January 21st, 1899.]

This paper is prepared mainly for the consideration of marine engineers, but many of the remarks will refer to shipyards and manufacturing works generally. It is not intended to be a paper in the ordinary sense of the word, so much as a basis for discussion.

Before laying out a works it is important to determine as far as possible not only the kind of work to be done, but the size of the work; and, speaking generally, it is better to keep to somewhat narrow limits rather than to try and adapt the works for many kinds of manufacture. The designs will be quite different if it is proposed to make a specialty of small engines to what they would be if engines are to be built for ordinary cargo boats; still more, if it is intended to build machinery for the largest class of steamers. There is necessarily a limited demand for the largest class of work, and as the buildings and machinery must be large and very expensive to deal with large engines, it is not wise to put down a factory for this class of work unless it is clear that a continuous supply of orders for large engines can be secured with some degree of certainty. Speaking generally, the writer thinks it is also well not to attempt to make machinery and parts of engines which are a specialty of other makers; as for instance, it is probably cheaper to buy pumps and auxiliary engines than to make them. The writer is not sure that it is wise for engine builders even to make their own castings, and the experience of the principal Scotch engine builders appears to point to the wisdom of buying castings. It will generally be found advantageous also for engine builders to buy their forgings, as a forge can only be made to pay if kept full of work, and few engine works can keep a forge supplied with work for their own requirements.

Another very important matter to be considered in laying down an engine works is the site to be chosen. This must be done with great

care; the primary condition, of course, being that the works should be in the neighbourhood of shipbuilding yards, and should adjoin a wharf where ships of any size can be fitted out. There should also be access to the works by rail, and railway lines or tramways should be laid in all parts of the works; care should also be taken that there are plenty of powerful cranes; few things help more in keeping down the cost of labour than good crane power and means of quick and easy transit.

Workshops should be as large and open as possible; all small rooms and dark corners should be carefully avoided, and every shop should be light as possible both by day and night. In placing tools, care must of course be taken that the rotation of work should be continuous. The writer is satisfied that the plan frequently adopted of grouping similar tools together, as for instance, having all planing machines in one part of the shop and all drilling machines in another, is not always satisfactory, and sometimes involves unnecessary labour in carrying work to the machines. The tools should not be placed in groups of one kind, but with a view to the particular work which will be done in conjunction with other machines. It of course requires no argument to show that the best modern labour-saving machinery must be procured, but the writer is inclined to think that too much money is sometimes spent on special tools, and also in the way of duplicating tool boxes, head stocks, etc. It may be very frequently observed that where a machine is fitted with two or more heads, one only is in general use; this remark refers to tools which are being worked on piece as well as time, showing that the workmen find that they can earn more money by giving their whole attention to one tool.

One of the most important departments of a works is the tool store, which should be placed in a central position and carefully organised and worked. All tools, gauges, templates, working drawings, etc., should be kept in the tool store, which should be kept in charge of a tradesman who will make special tools, and will have under him a staff of men who repair and keep in order all tools, and will also make gauges and templates, and issue and keep a record of the working drawings.

It is important when starting new works, or altering and reconstructing old ones, that manufacture should if possible be suspended until the works are entirely ready for use. After taking into consideration the possible loss of customers and trade, the writer is of opinion it is still cheaper to suspend manufacturing operations during important alterations of an old establishment, or not to commence manufacture in new works until everything is ready, rather than to try and carry on

manufacture during the alterations, or to commence before the new works are complete; and even with every precaution in this way it will be found as a rule that no new works can commence manufacturing at a profit.

With regard to the staff, it is quite as important that the staff should be both sufficiently good and sufficiently large for the work to be done as to have a well laid out works with good machinery. It is of course easy to err upon the side of having too large a staff, but a very much commoner error is to have the staff too small. It is impossible to calculate the loss in a shipyard or engine works which will take place if the drawing office is undermanned and the work behindhand. It is only possible to manufacture cheaply if materials are got in, not only correctly, but in good time. It is upon this question of staff that masters frequently err. Most capitalists quite agree as to the necessity of having the best tools, and plenty of them, but the writer is afraid the majority consider that a large staff is a waste of money. Not only is it important that the drawing office should be well-manned, but also the commercial office, and particularly the cost-keeping department. It is of vital importance that the costs should be kept up to date, and an abstract of costs should be furnished, if possible, weekly, and made up to the end of the previous week, to the responsible managers, so that they may know how costs are progressing. To have this information whilst work is in progress, and when it is not too late to make an effort to reduce the cost of the job if it is becoming too high, must be of infinitely more importance than to have the information when the work is finished. This, however, can be done only by having a large and efficient staff.

Another point upon which capitalists and practical men sometimes do not agree, is as to having work finished before it is required. It is true that there will be some loss of interest, but this is much less than the loss which would be incurred if the work is behindhand and has to be finished in a hurry, sometimes regardless of cost. The cheapest way to build engines is to have as many repeat orders as possible, and to have the work on order as long as possible before it is required, so that it may be laid out to fit in with other work; thus a duplicate engine may sometimes be built 5 or even 10 per cent. cheaper by being put through the works with its fellow, although it must be ready two or three months before it is required, and the saving will be much more than pay for the loss of interest on the capital standing idle.

The writer is satisfied that modern developments and the present day system of very large works, often controlled by non-resident directors,

has been the cause of losing much efficiency through the loss of the personal contact between masters and workmen, and he thinks that everything that is possible should be done by those having the control of large works to foster a friendly spirit between masters and workmen. This can of course only be done satisfactorily if the advance is made from both sides, but necessarily the first steps must be taken by the masters. He is also of opinion that more attention might be given to the consideration of profit-sharing, notwithstanding the poor results which have followed efforts in this direction in this district, and he invites the members of this Institution to discuss this subject fully this evening.

One of the most important matters in conducting a manufacturing business is the selection of works' managers and foremen. There are probably few more difficult positions to fill than that of works' manager, because there must be a sufficient firmness to ensure obedience and respect, and yet there must be a feeling on the part of the men that the manager is their friend. The writer is afraid that many works' managers consider too much the former qualification; on the other hand, if the manager is not very firm, sometimes even to harshness, there is often an unworthy advantage taken of him by the workmen. The writer is of opinion that foremen upon being appointed, should certainly cease to be members of trade societies, and make some other arrangement for provision against sickness, old age, etc. He does not think that foremen as a rule knowingly allow the influence of trade societies to have weight with them, but it is contrary to nature that they should be able to act entirely independently of the society of which they have been a member for many years.

The writer considers that more attention should be given to the selection and training of apprentices than is often the case, and that the rules as to apprenticeship, non-membership of trade societies, attendance at night classes, etc., should be more carefully drawn and more strictly adhered to. To this end he is inclined to think that the old system of binding apprentices might with advantage be reverted to. More care should be taken with premium apprentices, premiums should be reduced, and premium apprentices should be compelled to adhere strictly to the rules of the works in which they were engaged. He is also of opinion that a class of excellent foremen might in course of time be formed from premium apprentices if more care were taken in their training, and it may be interesting to state that he is experimenting in this direction, having attached some of the apprentices to the foremen as junior assist-

ants; in this way they get an opportunity of picking up all kinds of information which could not otherwise be acquired. The plan has not been at work long enough to judge of the results, but it promises very well.

The writer strongly recommends the principle of payment by results, from the managers, to foremen and workmen. Managers should be paid partly by a percentage on the profits of the works or of their department; foremen should be paid partly by a bonus upon the quantity of work turned out, providing always that it is satisfactory; and workmen should be paid by piecework, which should if possible be supplemented by the comparatively new American bonus system, and he sees no reason why apprentices and boys should not also work by piece. The writer has made considerable progress in his own works in introducing piecework in the machine and fitting shops. It has been a very long and tedious business, but promises to be entirely satisfactory, both to masters and workmen. The result so far shows that there is not so much reduction in cost but a great increase in output.

The writer looks to the gradual, careful, and persistent introduction of the system of payment by results, as being one of the most hopeful means by which we shall be enabled to hold our ground against foreign competitors, and he is of opinion this question is one which will bear very careful consideration and discussion.

It should be clearly grasped by capitalists that the days of very large profits from engine-building are past. The competition for work is now so great, and the standard of requirements so high, that it is only in good years that a large profit can be made; and experience has taught us that trade fluctuates so much that good years are invariably quickly followed by bad ones, and therefore when a large profit is made it should certainly not all be divided, but part should be kept for a reserve fund to equalise dividends in bad years. If an engine works can pay steadily 5 per cent. on the capital, and gradually accumulate a reserve fund, after making proper provision for depreciation, and taking care to buy new machinery and tools, and also make minor extensions from revenue, capitalists should be satisfied that the investment is a good one, and if such a policy could be carried out, there would be much less difficulty in getting capital subscribed for manufacturing purposes. Manufacturers are not entirely free from blame for the present peculiar way in which the investing public will much more readily put money into mines and all kinds of speculative investments abroad rather than into shipbuilding and engineering companies at home.

The following suggestions are made as to a few points for discussion, viz.:—

1. Payment by results, including piecework.
2. Profit-sharing.
3. Best means to ensure a friendly feeling between masters and workmen.
4. Does a large staff pay ?
5. Qualifications for works' managers and foremen.
6. Binding apprentices.

DISCUSSION.

The PRESIDENT was sure they had been very much interested in the paper they had heard. To his mind it was a paper of very great value to young and to old. It seemed to him it afforded an infinite field for discussion. Mr. Westgarth had brought together a vast number of points of the greatest importance both in laying out and organising works, and as regarded the management and smooth working of them. He hoped they would have an excellent discussion.

Mr. SUMMERS HUNTER, in opening the discussion, said he considered this was a very important paper, and they could not deny that Mr. Westgarth had "broken the ice" upon some very important subjects ; in fact he questioned whether this paper would have been delivered a few years ago. They had had a good example of the confidence existing between fellow-manufacturers that day, in the visit paid to the Central Marine Engine Works, and having been through these works, this paper was peculiarly appropriate.

With regard to what Mr. Westgarth said about the designing and laying out of works, they could not but agree with him in most of the points: at the same time there were some matters in the paper with which he dared say they might differ. The paper touched upon so many important points in connection with the laying out and the conducting of an engineering works that really he was rather at a loss how it was to be dealt with in the ordinary time allowed for discussion. He thought there was matter for discussion that could possibly be divided into half a dozen papers. It was a comprehensive paper. Passing over Mr. Westgarth's general remark on the laying out of works, which were

exceedingly good, he would refer shortly to the works they had been through that afternoon. The foundry question being raised, he considered this particular foundry, with its two bays at right angles, was one of the best he had ever been in. The whole works, he would take that opportunity of saying, were so splendidly adapted that although it must be some sixteen years since those works were commenced; yet they found that to-day they were fully equal to the demands made upon them for a larger output, keener competition, and the works were a lasting memorial to the genius of the designer.

As to the foundry arrangement already referred to, in having cupolas in the corner, and being able to deal with two wings of the foundry, with such a foundry there was no doubt it must pay an engineer to make his own castings, though others would differ from him. The paying of the foundry depended largely upon the management of it, and in referring to piecework that applied to a great extent to the foundry. He believed in a great many foundries they worked piecework successfully, but it was only when the person giving out the work was a responsible official directly interested in the success of the department, and also, who knew actually the cost of the various jobs. Another form of piecework, but which he deprecated, was the employment of moulders rated at the standard weekly wage, but actually being paid a fixed sum per hour extra.

He considered a foundry paid best when worked on day wage, and with proper and sufficient supervision; and further, with their own foundry they were sure of getting the proper delivery of their castings. Referring to the forge: it was important to have good forgings, and it was important to have delivery of them; but as to the necessity for each engine works to have a forge, it was really a question for each works to adjust on its merits. With regard to the placing of the tools in engineering works, the question of dividing them, and so forth was no doubt perfectly correct. It was not always advisable to place similar tools all together. Another feature of placing the tools in the engine works was the question of taking the work to the machine or bringing the machine to the work. That to-day was a simple matter, as with electric power they had got small useful machines which could be taken to the work whilst the erection of the engine or construction of the boiler was going on, and so facilitate the final completion. There was much in this paper to discuss, but he thought with those general remarks he would like to refer shortly to the suggestions at the end of the paper. "Payment by results, including piecework." He was quite with Mr. Westgarth in payment by results, although on a question of piecework he preferred to

draw the line. Piecework in some departments of an engine works was a dangerous thing, whilst in others it enabled them to turn out more work, and probably at a lower cost.

However, an arrangement, such as Mr. Westgarth had made, of creating a department for the costs to be arrived at, was undoubtedly advisable. At the same time, he believed payment by results to be more desirable than piecework. He did not know that piecework always paid a man according to his merits; by superior intelligence one man could get more out of a machine than another. Mr. Westgarth suggested for foremen a bonus per engine, but he thought the bonus should depend upon the cost of the engine. If this were not taken into account a bonus meant payment for output regardless of cost. What they wanted was an inducement for foremen and officials to economise, and see that a day's work was got for a day's pay. One way in which it could be done was this. To take the foremen's or officials' salary as representing his capital in the works when things were normal, or when they were just paying their way, when they paid a dividend they could afford then to pay the foreman a somewhat equivalent percentage on his salary. Give him his salary, but let him know whatever dividend the works were made to pay would be paid upon his salary or *pro rata*. When an official knew that the advance upon his salary depended upon the dividend he would think more about the cost of the work. Within the last year or so a great deal of light had been shed upon the way foremen in the past had worked for or against their employers' interests, and he thought it very important to pay by results, and on some such basis he had suggested, thus giving the officials an actual interest in the works.

This could be carried out not only with foremen but chargemen, and in some cases it was advisable to make the chargemen into foremen, and give them a share in the profits. As to the "best means of ensuring a friendly feeling between masters and workmen," that was a very important question, and one he felt more difficulty in dealing with. The friendly feeling which should exist between employers and the workmen really commenced with the foremen, and that to his mind made it so important that they should be so particular in the selection of a foreman. The duties of a foreman were very important, he might have under him a hundred men or more, so that there was really a lot of money in his hands, and consequently a foreman could make or lose for the works; and when a question passed the foreman, it was a great matter for the works' manager to adjust it, letting the men understand

that he could put himself in their place. That was the only way to get at the root of the matter. It was a way often out of a difficulty, and promoted the friendly feeling that should exist between employers and workmen. The management of works was not altered by the increasing functions of the Employers' Federation. The manager still had full control, and if possible should keep a dispute in his own hands, for once it left him the way was opened out for greater difficulties. First, leave a dispute for the foreman to settle; if he could not, then let the manager do it in his own way. Then, "does a large staff pay?" That was for the particular works to settle. He believed in departmentalism to the greatest extent. But there was a danger in that; the danger to be avoided was that one official should not pass too many of his duties over to one under him. There was no doubt that money could be saved in having a sufficient staff to keep a thorough grasp of the work, to keep it from getting behind, and carrying it on, not only economically, but efficiently. In piecework they induced a man to get through a large amount of work, but they require more supervision. There was a certain kind of work in an engine works he could not give to piece-workers: it was of far too much importance, even if it were only a screw or bolt. They could screw a bolt easily enough, but it was in the final operation of fitting that showed a mistake might be made by the anxiety of the workmen to make as much money as possible. As to the question of apprentices, he quite agreed with what Mr. Westgarth had said about it, and it was carried out in their works. It was most advisable to select their best apprentices and encourage them in every way. They were always useful about a works, they could always find special work for a sharp apprentice. A certain proportion of these superior apprentices would without doubt find their way to responsible positions in the works. It was from these apprentices, who in addition to natural ability had had the advantage of better general and technical education, that our foremen of the future would be taken. He would conclude by thanking Mr. Westgarth for his important paper.

Mr. W. C. Borrowman said he should like to thank Mr. Westgarth for the very able paper he had given to the Institution. He had enjoyed the reading of it very much, and, so far as general principles were concerned, the paper was in every respect all that could be desired. If they particularised, however, and came to consider details, it was a very difficult matter to be able to set up any definite rules of management apart from the works to be managed. The best system would of course

be found out after one had been associated with the works for some time, and what one should aim at in the consideration of how best to manage works would be to have all the departments working in harmony. There should be no one department weaker or less competent to turn out work than the others. Both men and tools should be organised and arranged for a maximum and economical output, and whether this were possible or not lay very much with the directors and their views of shop expenses, and for this reason he thought that directors ought to be either thoroughly practical men, and so be able to appreciate the requirements of a works, or totally laymen, and give the manager full say as to the equipment. He would like to ask Mr. Westgarth one question in connection with the costs. When he advocated having all costs of work available during the progress of the work, and when not too late to be able to make an effort to reduce the cost of the job, how was that to be done? His idea was that under ordinary circumstances a manager ought to be able to see the end of a job from the beginning, and at any point know whether anything was occurring tending to loss or increase of cost. A good deal sometimes depended on the design. Castings and forgings ought to be so designed as to suit the machinery, and so as to be finished in the machines entirely with as few shifts as possible. Whenever the design was such that hand boring or chipping had to be resorted to there was a great leakage of economy, and every time a forging or casting had to be shifted on a machine, or from one machine to another, there was consequent expense; but with as perfect machinery as it was possible to have, successful management was not attainable unless the *personnel* of both workmen and foremen was of the very highest character. With regard to premium apprentices, he had never seen this system to be an advantage either to the masters or to the apprentices themselves; in fact, his experience was that it was bad for both. It did not tend to stimulate effort on the part of the premium apprentices, and it did not give those who were not able to pay such a fee a fair chance nor the same advantage, and surely it could be no great satisfaction to anyone to have to say that but for his father having paid £300 towards his training he would not have been able to get along with his business. Mention had been made of profit-sharing. Would Mr. Westgarth advocate corresponding loss-sharing? He would agree to foremen sharing in the profits and having a benefit in any economy they were capable of introducing, but he thought the time had not yet arrived for profit-sharing with the workmen. So long as men maintained the attitude they did towards employers, and so long as piecework was the only means by which men could be got to put

in a respectable day's work, profit-sharing was too advanced, and this suggested one of the most gigantic problems of the present time, viz., the labour question. Was it not a pity that so little profitable attention was paid to the principles that underlie the commercial success not of a works only but of the whole country, and that in the highest quarters capital was being made of this ignorance? They all knew that unscrupulous place-hunters, and even the newspapers by their cheapness and wide diffusion and advocacy of popular fallacies which took with the working men, incensed operatives against their employers, and at the expense of the interests of every other class of the community. He could see something in these paid agitators if they or their trades unions in the very slightest degree contributed to the securing of the orders and work, in the execution of which the working classes had to live; but this, the securing of work, the finding of capital, the running of risk both in design and execution, was left to the much-abused and long-suffering capitalist, while the work was carried out under rules which self-constituted and utterly irresponsible bodies chose to impose. These agitators had for their avowed object the raising of the status and the wages of British working men, but he never yet found that to attain this they advocated thrift or temperance among the working classes, they never advised better education, nor an increased output and better class of workmanship, but rather by holding out ridiculous visions of shortened hours of labour, by compelling restriction of output, by introducing a minimum wage, which, by the way, also became the maximum wage, imbuing the workmen with the fatal delusion that by such means a greater number of men would obtain more remunerative employment. Until these matters were adjusted he thought that profit-sharing could not be entertained. The paper (continued Mr. Borrowman in conclusion) was a most suggestive and instructive one, and indeed every one of the headings into which Mr. Westgarth had divided it would make ample subject-matter for a separate paper.

Mr. J. R. FOTHERGILL said Mr. Westgarth's paper bristled with so many features of importance that he found it impossible to do more than speak to one or two points. He was much interested in hearing Mr. Borrowman's views on the apprentice question. On more than one occasion he (Mr. Fothergill) had, in public, spoken to this question and suffered severe criticism, but he felt the premium apprentice was fast becoming a feature of the past. Many large firms, particularly the great Fairfield firm, had found it a failure, and given it up. From personal

experience, he had found a premium apprentice was, in many works, from the foremen downwards, looked upon with considerable prejudice, and placed in an altogether false position, and unless the manager took them under his immediate supervision and organised their training, they were treated with indifference and allowed to go their own sweet way, which, as a rule, was far from satisfactory. He strongly disagreed with the opinion that premium apprentices should be taken and trained to become foremen. If this system was encouraged it would mean that the lads whose fathers were not prepared to pay a premium would be cut off in competition to advancement in life. It was well known many of their most prominent men had risen from the ranks. Many fathers strove to give their lads a good education, but could not afford to pay a premium; yet many of these lads, during apprenticeship, took full advantage of the facilities for technical education: was it reasonable to place such a barrier to their progress? Where would be the incentive to improvement? The classes conducted in this building (The Technical College), in the lecture hall of which they were assembled, were well attended by apprentices from the various works, and he could assure them, as a member of the committee, these lads were anxious to progress in the various classes they attended, although it frequently meant hurrying to the classes after work and returning from the class direct to bed, and the nights of non-attendance at the classes meant home work. If an apprentice clearly understood his preferment in life depended upon himself, it was the best incentive to go ahead, and the surest way to produce useful and reliable men. What he did think there was great room for was a more systematic and thorough training of the apprentices in the shops. There was too much subdivision of work. When a lad was out of his time he was proficient at one thing only. This was simply due to a false commercial estimate of his value. In large marine engineering works, where so many lads gravitated to the sea, he should imagine it was much to the advantage of such firms to train lads to an all-round practical knowledge, so that they would be proficient as junior engineers on board such steamers as they had to supply engines to to fulfil the guarantee. His experience was that the majority of such junior engineers had little or no knowledge of the general arrangement of the machinery or of the work required to keep them in good working order, and yet they had not only to take a watch, but attend to the upkeep of most valuable engines. Other things being the same, would it not pay to take such lads who were proficient at the technical classes and train them to an all-round practical knowledge of the engines, so that they

were fully capable of doing their duty at sea? There were many other interesting considerations which could be advanced, but he regretted time prevented him doing so, and for the same reason he must forego criticising other features of the paper. In conclusion, he offered his hearty thanks to Mr. Westgarth for his most able and interesting paper.

Mr. HENRY WITHY said the engineers so far had had all their own way, and he thought shipbuilders should have a word. Mr. Westgarth did not confine himself absolutely to the organising of engine works, but, to some extent, referred to shipyards. To begin at the beginning, what were the engine works for? To build engines for ships, therefore he thought an engine works ought to be under the control of a shipyard. He did not say that a shipyard manager should interfere with the engine works; but the engine works should be in connection with the shipyard. The combined works should be large, with plenty of water space, plenty of quay space, and good railways, so that the two departments may proceed simultaneously. That was a very important point. The quay should be such that several ships could be placed there and worked at the same time. The cranes should be very powerful. Nothing was so suitable for an engine works as a large mammoth crane to pick up weights from the ground and lift them into the ship. If the works were large they could add a new tool here and there without any trouble, but if the works were crowded it probably meant moving another. Of course, he should say in starting new works it would be fatal to attempt to build engines before the works were finished; but in alterations the great question was not to lose a customer. With regard to the staff, it was difficult to have it too large, but if any drones were found they must be cleared out. In an ordinary way the more supervision the better, and the drawing office work should be most carefully and completely carried out. Mr. Westgarth mentioned how necessary it was to keep the costs up to date. He might tell them of a little plan they had: the total time was made up to Tuesday night. By Thursday each foreman got a sheet with the name of every man and the amount of money due to him. The foremen signed them and sent them to the manager on Friday, and the money was paid on the Saturday. This enabled the foreman to see where the money was going, and induced him to keep his list down as small as possible. On the question of profit-sharing he was afraid he could not say anything, the difficulty was the sharing of the losses. He was much in favour of piecework, and did not see any

difficulty in introducing it into engine works. Mr. Westgarth had mentioned capitalists. It would be a great advantage if the capitalist were a practical man, and had shipyard and engine works combined, building and equipping vessels on speculation, and thus sharing the merchants' as well as builders' profits. In the ordinary way the engine builder could only look for a manufacturer's profit. In regard to apprentices, he was in no sense in favour of premium apprentices. He held that every apprentice should take his chance upon his own merit, the foreman would pick out the best lads and make the most of them A manager looked upon the men and boys as assistants in his work, and if he found his instructions were faithfully carried out by any one without further trouble to him that man or boy was going to get on.

Mr. SUMMERS HUNTER asked permission to make an explanation. He would just like to say a word about the apprentice question. From what some speakers had said they seemed to have got an impression that he was in favour of putting premium apprentices over ordinary apprentices. Such was not the case by any means. Mr. Westgarth used the term "premium" apprentices, and referring to that paragraph in his remarks he (Mr. Hunter) made use of the words in that way, the ordinary apprentice got into the drawing office on his merits, and was also put into other parts of the works. Some of their ordinary apprentices occupied responsible positions in their works. Numbers of their ordinary apprentices had attended the Durham College of Science with marked success. At the same time, the pupil or apprentice who by special arrangement went through a regular course of the various departments in the works, who had also commenced with a good education, and taken some courses at the college, this apprentice was also entitled to be rewarded on his merits. They wanted practical and intelligent foremen, and education was an undoubted advantage.

Mr. W. G. SPENCE thanked Mr. Westgarth for his paper. He had treated his subject with a broad touch, and left the details to be filled in by discussion. The writer first dealt with the situation and laying out of works, and he (Mr. Spence) thought the last speaker was right in advising plenty of everything. No one would dispute that; but as a rule the difficulty was in getting the plenty. A very good thing, and one often difficult to get, was sufficient spare ground, covered by crane power, where castings not required at the moment could be dumped and

again lifted and brought into the shop when needed; thus avoiding piling them up to the roof, only to find that the bottom one was wanted first. As to placing machines of each class together, he thought that was a matter each works must settle for itself, relying upon its own peculiar conditions and the nature of the work to be done. Mr. Westgarth seemed to question the advantages of such arrangement. He (Mr. Spence) thought it was often advantageous to place tools in pairs. Thus, a couple of planing machines could be run by one man, as was now frequently done; or a couple of boring or other machines placed together could be worked by a man and a boy; if placed further apart they would often require two men. That was a fact to be remembered in placing machinery in new works. Next, as to special tools for special work. That, again, he thought, was a matter to be largely settled by the nature of the work. Taking it all round, he thought universal tools, or tools specially designed to take in work that only occurred very occasionally, a mistake. He thought a machine should be designed for the regular work it had to do, and when the special job came along it must just cost more. He thought it a mistake to punish the regular run of work for something which only happened occasionally. The next point mentioned was a central tool store. This had come very much to the front, and he did not suppose there was an up-to-date shop without some such arrangement. With regard to apprentices. He thought Mr. Fothergill mentioned the question of training them both as fitters and turners. He (Mr. Spence) had great sympathy with this. He never made the slightest difficulty in shifting lads from the machine to the fitting shop, provided they had shown sufficient interest and diligence to warrant such encouragement. As to the question of paying premiums, and of a works narrowing down its positions specially for them, that was a thing that might be safely left to look after itself; merit would come to the front. By paying a premium a certain amount of advantage might be got at the start, but very little, and men had generally to get forward by their own unaided effort. In engineering, as in everything else, people had to "work out their own salvation" for themselves. Next, as to the question of up-to-date costs. If one could get a weekly return of the cost on each engine it would be a blessed thing indeed, and a great relief to the mind; but most people, he was afraid, had simply to wait with some anxiety for the end. Mr. Westgarth raised the question of friendly feeling between masters and men, and that this was diminished by a system of non-resident directors. Personally, he (Mr. Spence) thought the great cause

of want of touch between employer and employed was more than anything else due to works having become so large and population so dense. If they had a works with 30 or 50 men, they knew each individually, to say nothing of their fathers and mothers, and possibly grandmothers; but when they came to works with 1,500 or 2,000 men, that patriarchal felicitude disappeared, and they largely got out of touch with the unit. If an employer or manager kept on intimate friendly terms with his foremen, he (Mr. Spence) was afraid he must leave it to the latter to know most of the men intimately, and much as he regretted it, he did not think it practically possible to do otherwise. Hence, it became at the present day more than ever important to have men of character as foremen, men who could keep their own place and be courteous to everybody; who, while not permitting themselves to be imposed upon, could frankly hear two sides of a question, and not be afraid to present it so to their manager; not hearing one story, and then going to him with a different version. A great deal depended on good foremen—more, he thought, than they often got credit for. As to foremen belonging to trade societies, he thought that thoroughly bad. Generally, when a foreman was appointed he was a man who had attained some age and had sunk a good deal of money in some trade society, as workmen were almost forced to belong to some trade union; and seeing that the unions were, so far as he knew, the only friendly societies which paid out of work benefit, he thought that condition would probably remain. When a man was promoted to foreman, however, he should be required to leave all such connection behind, and be given by his employer an equivalent for the sunk capital thus left. At one works he knew of they gave their foremen certain advantages, which would come into operation in due time, and which would, he thought, more than recompense each foreman for the sacrifice he had made. In short, the moment a foreman was appointed, he should drop all connection with his trade society; at the same time, he thought the owners of the works should place him in a position that he need not regret the change. He quite agreed with payment by results. Human nature was so constituted, that one was best served, when duty coincided with interest Finally, he thought Mr. Westgarth had placed before them a paper which would produce an interesting discussion, and personally he wished to thank him for doing so.

Mr. C. W. Cairns had one suggestion to offer to Mr. Westgarth as he seemed willing to try experiments with apprentices. He (Mr. Cairns) held

the present system to be inadequate. At present it was pure chance and native genius if a man learnt the use of his tools as he passed through the shops. Would it not pay from the point of view of the employer to subsidise a few of their best artificers to train the lads into a true use of their tools. It would not mean very much taken from the time of these men, they should simply see that the lads had the correct tool for the work and that they used it in the best manner. He took the part of every gentleman who had spoken against premiums. Those who had recently come from the shops knew both the ordinary and premium apprentices of the day. On the supposed point of superior education on the part of premium apprentices, it was a pure myth. Young gentlemen were put into the shops, supposed by their fond parents and guardians to have the making of great engineers: they might or might not; but their education in the rudiments of (say) arithmetic would be a disgrace to a school board boy. He knew a young gentleman who came to the works from a fine grammar school, where they spent a portion of two days a week on arithmetic. He was now 16 to 18 years of age and did not know what a logarithm was, yet, doubtless this gentleman would in time control large interests and be considered fit to supervise both the theoretical and practical departments of some works.

Mr. R. Wallis said Mr. Westgarth's able paper, as most previous speakers had remarked, was sufficient to discuss for the rest of the session. On the question of an engine works running its own foundry he could speak feelingly. They ran their own foundry, they avoided the vexatious delays, and when they came to total up the year's work they found their own foundry paid. So there was no doubt about that, provided it was run upon proper lines. The forge he could not say so much about, but possibly that might follow in the same way. The question of cranage was an important matter in running large engine works. He knew one large works which had increased the number of cranes from one to four, and at present the cranes were all fully employed with great advantage. They wanted ample crane power—a most essential part in economical works. The question of grouping the machines was one on which a great deal might be said. A judicious grouping of a certain portion of their machines was, he thought, the right thing. If they took their individual pieces of work separately and laid down the whole plant to suit the exact running of each individual bit of the manufacture they should find possibly that some parts got ahead of others, and foremen took a piece from one machine to another to keep

it employed. By grouping portions of the machinery that could be avoided ; on the other hand, it would not be the right thing to crowd the whole of their planing, slotting, or other machines in the one place. It depended upon the character and design and the size of the works. The question of duplicate tool boxes followed much the same way. They could overdo duplicating tool boxes and they could underdo. If the duplicated tool is so constructed that they could run one, two, or three tool boxes and keep them all fairly employed it was an advantage; if the machine was of such a character as only to employ one comfortably, then the other was waste. Tool stores are now introduced into all modern works, and there is not much divergence of opinion in regard to their utility. If well kept and managed it was best to have a central store. A great deal depended upon the man in charge of it. The size of the staff was one that in a great many cases was undervalued. If their staff had got sufficient work to keep them busy all day it was not overdone, and they could keep adding to it as long as their staff of foremen were all employed. The limit to which they could go was one for the manager's judgment. The selection of foremen, as most of the speakers had said, was one of vital interest to any establishment. The question of apprentices was one that had been occupying the attention of many of the ablest men in their profession, and he hoped some good result would come of it, because some of the engineers who were turned out at the present day were not a credit to engineering or the shops from which they came. The technical schools and other advantages which apprentices had nowadays should give lads the best chance, and a great number of their works were recognising the fact that very many of their best men came from the ranks of the ordinary apprentices, who, by studious efforts during their apprenticeship, rose to the best positions. As to the work mentioned by Mr. Fothergill of technical schools, his own difficulty was to get the apprentices, not so much from the engine shops as some of the others, to attend evening classes. The foundry was the shop in which he had the greatest difficulty to get intelligent lads to enter. It seemed as if the engine shops and boiler shops picked up the best of them and all the worst were left for the foundry. The reason for that, he considered, was that their technical schools offered no inducement whatever to a lad in a foundry to attain any success at the classes. On the question of payment by results he again agreed with Mr. Westgarth, but the bonus system should not be paid on output. If they fixed a wage, one that they could afford to pay during dull times, it was quite the right thing that the staff's salaries should increase with good times,

when employers could afford to pay the increase from the increased profits. He thought it better to pay on the output. It might be that foremen would work more economically if they knew their efforts depended upon profits rather than large output.

Mr. WESTGARTH asked leave to make an explanation. It was quite evident that the feeling of the meeting was against premium apprentices, especially on the part of the younger members present. When he spoke of "premium" apprentices he used the word as a generic term to describe gentlemen apprentices as distinguished from the ordinary apprentices. The members all knew they had frequently to take the sons of large customers and friends of their directors, and they had to pass these boys through various departments and the offices, they could not train them only as fitters and turners, etc. If the experience of members was like his, they would be troubled with a great many applications to take boys; indeed, he did not know where they all came from. For various reasons it was necessary to take some of these boys, many being accepted without a premium being required, but in some cases the claim of the boy upon the firm was not very strong, and then it was that a small premium was required; but even this was mostly returned in the form of wages. Speaking generally, he was opposed to the payment of premiums, and might add that he did not pay a premium himself, having started in the works as an ordinary apprentice, and at the present time his chief draughtsman and estimating draughtsman were both men who had risen in the works and did not pay any premium. His custom was always to have at least one ordinary apprentice in the drawing office, the appointment being given to the boys who showed the most attention to their work, and took care to improve themselves by attending night classes, etc.

Mr. W. MILLS thought the most important part of the paper was the first item set down by Mr. Westgarth for discussion, viz.: "Payment by results, including piecework;" and he thought it would be a tremendous advantage to English manufacturers if they would consider this more at the present time on account of the American and foreign competition. He believed in America piecework was almost universal. From actual experience in his own works, he often found the cost for labour on small articles made on time would come out two or three times as much as for the same articles made on piece, unless special

supervision was given. They could not compete at any price in brass work, such as small cocks or valves, unless they were made on piece. He could sympathise with Mr. Westgarth in trying to fix piece prices in the manufacture of marine engines, if it had not been done before, as without any data it must be a most difficult thing to fix the amounts to be paid for each separate part. They had different systems in America to what they had in this country; there, it seemed to be easy of attainment, on account of so much repetition work, and the men preferring piecework. One reason manufacturers produced cheaper there than in this country was, every man was striving to beat his neighbour with the hope of some day being a master himself. He had not been in America to find this out; but he had taken great interest in their methods, and asked many Americans how work was carried out in their shops. One system not done in England to his knowledge was like this: Suppose 12 of any article was considered a day's work, and the pay for the same was 12s., then should the man produce 24, instead of paying him at the same rate as for the first 12, they would pay a higher rate, say 14s., for the extra 12. It might look ridiculous at first sight, but the employer was getting 100 per cent. more work out of the man and machine than the ordinary day's work with practically the same standing charges, and therefore could well afford to give this extra incentive to the men, instead of docking his pay and thus reducing the output. Of course this system could only be adopted after a considerable experience and actual tests to find out what was an average day's work. It was a system that ought to be carried out in England. Ships were built on piece, and he did not see why engines should not be made on piece. Another thing, manufacturers had to produce on piece, why not the men also? After taking a contract the material and other charges remained the same throughout, and barring accidents, the only alteration that could take place in the original estimate was in the labour. Therefore, if all labour was on piece, employers would know how they stood with contracts, and would be quite content if a man made time and a half, or time and three quarters, which many did in places where piece was paid entirely in ratio to the extra time paid, the production in the same works would be proportionately increased It was well known in certain special lines some men could produce twice as much work as others, therefore it was a very difficult matter to fix what was a day's work, but by watching the day's production and taking out the actual costs it could be fixed.

In paying managers, they ought not to pay them on the quantity of work or indicated horse-power turned out, but on the reduction of the average cost of the labour for that work. In an established business it could easily be ascertained what was the average cost for certain classes of work, or the indicated horse-power built, and if managers and foremen were paid a certain percentage of the reduction of that average cost, it would be a tremendous incentive for them to use their brains to reduce that cost in every way possible. That was the only way, he thought, to pay the manager, and the only way to pay the men was by piece, and by this means everybody participated in the profits, and if carried out properly there could be no loss to the manufacturer, barring accidents, and thus one objection as to the men sharing in the losses would be removed.

He thought this subject ought to be more discussed amongst manufacturers and managers generally. He would like to suggest that they have a paper on payment by results, including piecework. They were all working for one result, that was to make dividends and money for themselves. Piecework and payment by results was the crux of the whole question.

Mr. A. M. HENDERSON said he had listened with great interest to some of the speakers on a very interesting paper, not giving so much information as asking for it. That was, however, a paper he liked to see, and while looking at the first part of it everyone naturally would be prepared to admit that on the question as it stood much could be said for or against it, all circumstances taken into account. For instance, it was common sense at least for the capitalist to get the best man to lay out and design his works and afterwards to run them, but in the manufacture of specialties he took a different stand. He said, "Give me the chance to either design or suggest the machines required and I will make specialties as cheap as any man." Another thing, specialties were first-class training for their apprentices. At the present time he found great difficulty in large works to find employment for the apprentices they had got. They wanted to turn out so many engines in the year: he had not time to put off with the younger apprentices, but give him winches, donkeys, tanks, or anything they chose, and he would make the apprentices do them, and do them at a profit. Another thing he would say with regard to the making of their own forgings and castings: they might as well keep their own forge and foundry, because those who supplied them must have a profit, and anything they had to use in fair quantity he would prefer to make rather than buy out.

They wanted to pick out the men to make work pay well, and also give them the different tools and material to produce it. While talking of the machinery, etc., he might as well mention he never could go in for this rage for Yankee and foreign tools. Give him a good, sound English or Scotch tool and he would beat all the Yankees could produce. He was quite prepared to prove it. They bought Yankee tools (they had got some of them into their own shops), they got them because they could get quick delivery, and English tool makers fell out by not having something in stock; but give him a good, honest English machine, and give the same price they gave for the Yankee one, and ten to one they would get better work from it. With regard to specialties, that was a very small matter in the ordinary marine works. He had tried for the last twenty years to get all-round powerful tools, such as they required in a marine engine shop. As they did not require any of those fancy tools made up of nick-nacks and continually breaking down here and there, they wanted a tool to put the article on and take all that was to come out of it and as broad a field as possible. When they came to small fittings, he quite agreed with the special tool, particularly if there was a great number of articles wanted. He was quite prepared to say that good, sound, proper home-made tools turned out far better work in shorter time than did a great many of the so-called Yankee tools of the present day. With regard to the foundry and forge very little need be said. They had been running a foundry for fourteen years and a forge for ten years, and he wished they could run a rolling mill for boiler plates. They had been simply crippled there—whereas with their own foundry and their own forge they went sailing on smoothly—they knew what they had in hand and what must be kept well in hand. No one knew the difficulties of a works' manager unless he had had experience, and he might say of some of the firms, and with all due respect, that as a rule managers did not get the recognition that they were entitled to. They had a difficult job to undertake. They were not born into it. They had to grow, and the growing was a hard process. They had not only to see the work done, and get it done, but they must have a better knowledge of the work than the man who was doing it, otherwise they were soon set down as duffers. With regard to the foremen, they had also to be picked men; who required special training to select and handle the men under them. They went up to the gate and had almost to pick them by head-mark. Then they had to use an infinite amount of tact, and after all their tact and ingenuity sometimes differences came in between them and knocked the whole thing into a cocked hat, while

they had to stand by and smile. With regard to payment by results, he would be pleased to take a cheque at the end of the year. But they could not eat the orange and have it, and if they paid the works' manager or foreman a good upstanding reasonable wage a very little gratuity would make him put heart and soul into the work, and he would not require any incentive. He would say "I am going to get that at the end of the week," and by tact he would accomplish it, and not by running at it like a bull at a gate. With regard to the account keeping, they had a very simple plan—of course he would not tell them what it was—whereby he could put his hand on every article made on an engine in process of manufacture, and could tell them to half an hour whether it was going to cost more than the one previously done. Besides, both works' manager and foreman ought to keep in touch with the work on hand, and as practical men know when there is too much time put on it, also the reason.

The PRESIDENT said they had had a very pleasant discussion, and it would now be postponed to another evening. Mr. Hogg's paper would be held over till the next meeting at South Shields.

NORTH-EAST COAST INSTITUTION OF ENGINEERS AND SHIPBUILDERS.

FIFTEENTH SESSION, 1898-99.

PROCEEDINGS.

FIFTH GENERAL MEETING OF THE SESSION, HELD IN THE LECTURE HALL OF THE MARINE SCHOOL, SOUTH SHIELDS, ON FRIDAY EVENING, FEBRUARY 17TH, 1899.

J. M. RENNOLDSON, ESQ., VICE-PRESIDENT, IN THE CHAIR.

The SECRETARY read the minutes of the last General Meeting, held in West Hartlepool, on 21st January, 1899, which were approved by the members present and signed by the Vice-President.

The VICE-PRESIDENT intimated that the President (Sir B. C. Browne) had been called away to London; and that Mr. Tom Westgarth, who was expected to reply to the discussion on his paper, was unable to attend on account of illness.

The ballot for new members having been taken, the Vice-President appointed Messrs. G. E. Macarthy and Henry Fownes to examine the voting papers, and the following gentlemen were declared elected:—

MEMBERS.

Bailey, James T., Boilermaker, 82, The Avenue, Wallsend-on-Tyne.
Brockett, Charles, Engineer, 35, Milton Road, West Hartlepool.
Detchon, John, Engineer, 115, Bell Terrace, Newcastle-upon-Tyne.
Hallowell, William, E. Draughtsman, 75, Chillingham Road, Heaton, Newcastle-upon-Tyne.
Harvey, James Andrew, Engineer, 3, St. Nicholas' Buildings, Newcastle-upon-Tyne.
Haussman, B., Engineer, 39, Gracechurch Street, London, E.C.
Munck, Ove. Holger, S. Draughtsman, c/o Messrs. Short Bros., Pallion, Sunderland.

Short, John Gill, Naval Architect, 57, John Street, Sunderland.

Thearle, Samuel James P., Lloyd's Surveyor, 6, Fern Avenue, Jesmond, Newcastle-upon-Tyne.

Thomas, Benjamin, Engineer, 25, Seventh Avenue, Heaton, Newcastle-upon-Tyne.

ASSOCIATE.

Ritson, Arthur, Shipowner, 30, West Sunniside, Sunderland.

GRADUATES' AWARDS.

The VICE-PRESIDENT announced that the Council had made the following awards for papers read before the Graduate Section during the last session :—

The sum of £4 to Mr. Aubrey B. Binns for his paper on "The Air Pumps of Marine Engines."

The sum of £2 10s. to Mr. Frederick G. Rappoport for his paper on "Pattern Shop and Foundry Practice."

The sum of £1 1s. to Mr. Robert Hinchliffe for his paper on "Some Notes on American Naval Architecture."

The above amounts have to be spent on books, instruments, or other articles which may be of assistance to the recipients.

The SECRETARY read Mr. T. Messenger's reply to the discussion on his paper "On an Improved Method of Strengthening Copper Steam Pipes."

The discussion on Mr. Tom Westgarth's paper on "Works' Organisation" was resumed.

Mr. ARCHIBALD HOGG read a paper on "Some Considerations on Freeboard and on the Relation between Scantlings and Freeboard."

MR. T. MESSENGER'S REPLY TO THE DISCUSSION ON HIS PAPER "ON AN IMPROVED METHOD OF STRENGTHENING COPPER STEAM PIPES."

Mr. T. MESSENGER, in his reply to the discussion on his paper, agreed with Mr. MacColl's remarks as to the weakening of the part of the plate adjacent to the brazed seam, and it was to guard against this failure of the pipe at that part that the bands were advocated, but he failed to see how the difference of expansion at the temperatures, even of the highest pressure of steam now in use, could have any injurious effect on the pipe. For instance, in the large pipe, 12 inches in diameter, to which the writer referred in his paper, no difference could be perceived when the engines were at work with 110 lbs. of steam or when in dock and cold ; moreover, this was a pipe existing in a channel steamer, and in every day's work subject to changes of temperature several times each day, the engines going and standing; and the cottars fitted in these bands have never become loose. Should it be thought necessary, these cottars might be slightly riveted at their small ends, but not sufficient to prevent their being pressed out when required.

With regard to the draw on the cottars, this could be made to accommodate itself to a considerable variation in size of pipe by making the cottars long enough and cutting a piece off one end or the other. The taper adopted by the writer is 1 in 16. No more skill or judgment is required in pressing the cottars home with the special tool than is required in spannering up a nut when making a steam pipe joint.

With regard to new pipes, the writer considers the use of these bands of nearly as much importance as applying them to old ones; he is of opinion that the deplorable loss of life which has occurred through the explosion of steam pipes might have been avoided by the use of these bands in preventing the copper steam pipes from ripping open at the seam as they have done, and he considers it a simple and effective means of armouring the steam pipes against this.

In fixing the bands in position two half straps with lugs and bolts, like eccentric straps, are used, these being placed outside the bands, which are thus pulled together in order to get the cottars first entered in the cottar ways, when the pulling together straps are removed and the cottars pressed home by the special tool. Although these bands may

appear costly at first sight the advantages of the greater support which they offer to the pipe and the facility with which they can be removed and replaced more than counterbalance the extra first cost, especially by allowing the use of one large pipe instead of two smaller ones as advocated by Mr. Thompson.

As there are a large number of vessels running with brazed copper steam pipes, the object the writer principally had in view was to ensure greater safety in dealing with these.

The VICE-PRESIDENT moved that a very hearty vote of thanks be given to Mr. Messenger for his able and interesting paper. Although a short one, he was sure it would be of use.

The proposal was adopted by acclamation.

ADJOURNED DISCUSSION ON MR. TOM WESTGARTH'S PAPER ON "WORKS' ORGANISATION."

Mr. Henry Fownes, in resuming the discussion, illustrated his remarks by special reference to the new forge works his firm was about to open on the Tyne, by a ground plan of the same on a large scale. He proposed, he said, in opening the discussion that evening on Mr. Westgarth's paper on "Works Organisation," which was at once unique and instructive, to take his remarks in order. Naturally he agreed with Mr. Westgarth that it was not advantageous for engine builders to have their own forges any more than their own foundries. In reality both businesses were manufactures of their own, and required special experience in the management of each, and the success of both was in a great measure due to their being kept fully employed, which an individual engine builder was not always able to do. The tendency of manufacturers nowadays was to go into specialties, whereby a man devoted his whole energies to his own specialty, and generally with greater success. In a manufacturing business such as a marine engineering and its kindred industries as now practised, the site was a most important matter, and railway sidings into works, to avoid expensive cartage, were an absolute necessity. He was, fortunately, able at the present moment to show them plans of new works now being laid down on a site fulfilling all the necessary conditions as mentioned by Mr. Westgarth, to wit, his new forge works near Tyne Dock. If they would kindly refer to the plan on the wall they would observe that a siding from the main line ran into the works at one end with branches all over the works themselves, bringing in the raw material, which was worked, treated, and finished as required, in progressive stages, until it reached the other end of the shop, where it could be loaded finished into barges or on railway trucks, and dispatched to its destination. The plan and arrangements spoke for themselves, better, perhaps, than he could explain them. The use of cranes and other mechanical means for transporting material, both raw and finished, was carried out as far as possible; electric travelling cranes serving the main shops, which were both open and large, from end to end, so as to avoid the heavy charge of dead labour, which was the bugbear of most manufacturing concerns. Profits from similar concerns in the future would have to be found in the general economies to be

practised. In this particular design there were numerous attempts to carry out this idea which hardly came, however, within the scope of this discussion, and would take too long to explain; but which he hoped to show them all in person at no distant date. He did not consider the grouping of tools to be economical, except for small tools, and where a duplication of parts was required, such as making rifles, etc.; also duplicating tool boxes and tools on any special machine, was all very well in theory, but was a point which might be carried too far. He strongly believed in a large and efficient staff—not to be extravagant—but too great an economy in this respect made work very expensive; it retarded its progress, mistakes were made, and the result was generally unsatisfactory, as one man could not look after too many details; and in no case was it more fatal to the success of a manufacturing concern than to economise too greatly (which was practically neglecting) the cost department. In his own particular business one of the best systems of cost which he knew of, and which he had successfully practised for many years, was introduced by a co-director of their president, with whom for some time he was in close business connection, and, he hoped he might be permitted to remark, to his great advantage, so far as his business experience was concerned. He had no difficulty in getting the costs as the work proceeded week by week. The difficulty was not so great now as it formerly was, but the difficulty in dealing with certain competitors arose from the fact of their not being acquainted with the cost of their own productions: the general results at the end of the year were perhaps right (or wrong) enough, but the cost of the different classes of work was unknown, some classes being charged too high, and others too low. Personal contact between masters and men was, wherever practicable, to be commended, as it tended to the fostering of a friendly feeling between them, and he was quite in favour of a system of profit-sharing so long as it was conducted on proper business lines. There must be no Utopian ideas about it. The only practical idea that he could at present see was to make the shares of small value, so that the men could invest their earnings from time to time with special advantages which might be arranged. He was much interested in reading the report of a speech by their president on a similar subject a few weeks ago, and he thought some practicable idea might be evolved, and no business lent itself to the idea better than a forge, for many reasons, which would take too long to explain here. For eighteen years he was himself engaged in the works where the late Dr. Rutherford made his co-operative experiment, and the more he knew of the matter the more did he respect Dr. Rutherford for

his ideas, which, though sound and correct, were perhaps a little too advanced for the time. So far as he had been able to judge, the failure of the experiment was not due to the co-operative idea, but to the neglect of the first principles of business, and to the fact of taking contracts below cost price. Naturally, on practical matters, Dr. Rutherford had to rely on others for advice in this respect, who probably erred in their judgment as many of them did still. Foremen and managers were doubtless better clear of any connections which did not enable them to exercise their functions absolutely impartially, and other means might be provided for them to ensure against old age and sickness. As regarded premium apprentices, he thought the less said about them the better, but he regretted to see that the system of binding apprentices was apparently falling into disuse. In his own particular business, speaking as a forgemaster, the system of apprenticeship was disgracefully neglected; and the system of payment by results was, perhaps, more largely adopted than in any other business. The whole subject of the paper bristled with ideas for discussion which might be prolonged far beyond the limit of time allowed for it.

Mr. W. E. Cowens was very glad to see a paper of this kind discussed at a meeting of this Institution, because he thought it would do a great amount of good, and he thanked Mr. Westgarth for bringing it before them. He did not intend to discuss the paper to any extent, because he thought most points had already been discussed pretty freely; but he should like to say a word on the question of piecework. There had been several references to piecework, and at West Hartlepool one speaker had mentioned the American system. That system was an advance upon their own, as it was a direct incentive to the workmen to do his best. It was a differential system and briefly consisted in offering two prices for the same work—a high price if the work was executed in the shortest possible time and in a perfect manner, and a low price if finished in a less time or in an imperfect manner. Thus in a machine they would probably with piecework limit the man to time and half, if his day rate was 6s., say to 9s. per day. The American maximum price would probably allow the man to earn 14s., and probably double the output. The machine cost in each case would be the same, say, 12s. 6d. per day (the workman's pay being only one factor of the cost). The English cost would therefore be, say, 21s. 6d. for five articles, or say, 4s. 7d. each, and the American cost 26s. 6d. for ten articles, or say, 2s. 8d. each. The American price was fixed by a rate-fixing department, and was not

afterwards altered. In an English shop, if the workman made more than time and half, the rate would probably be reduced the next time the work had to be done, and there was therefore a great incentive to the man to keep something in hand, or in other words "mark time." Another system of piecework had been introduced, he believed, at Messrs. Willans & Robinson's, viz., a piece rate with a time limit, say, six days were allowed to complete a certain job at a certain price, if the man completed the work in four days he would be paid his piecework rate plus one day's time wages, the saving being divided between the workman and the employer. He hoped he was not encroaching too much on the time of the meeting; but he thought our present system of piecework very unsatisfactory. He could only repeat that he considered the paper a very valuable one, and hoped we should have more like it.

Mr. D. Myles agreed with the previous speakers in the great value of this paper and papers of this class, and while he would not attempt to discuss it as fully as it had been by some of the previous speakers, he would like to make a few remarks upon it. There had been a good deal said during the discussion of the paper about the making of specialties. He thought the question of whether works should make specialties or not depended really upon the quantity of these specialties required. If they required so many of them as to find full employment for special machines to do the work, then, he thought, the particular works was quite justified in taking up the manufacture of specialties; if they could not employ a machine, then he thought they were making the article at an enhanced cost, and it would be far better to buy it. This also applied to forgings and in a less degree to castings. Another matter that the paper referred to was plenty of crane power. That was certainly a very important item. The question of sufficient crane power was of sufficient importance to very largely decide whether a particular contract could be done profitably or at a loss. Along with crane power he would be inclined to include sufficient light, and would even go to the extent of having more light than was required rather than not have sufficient light. Two or three of the speakers had referred to the weekly cost sheets. He did not see any difficulty in providing weekly cost sheets, it was only a question of staff; but he thought those in charge of the works, foremen and officials, ought to remember that costs ought always to be kept as low as possible: he did not think that weekly cost sheets would be of very great value. The object of engine works, like that of all other industrial concerns, was to make dividends. The

particular manufacture that they might go in for was simply a means to an end: dividends was really the end, and that being so, it was everybody's duty always to keep down the costs as much as possible. Along with the preceding there was another important matter—he did not know whether it quite came under the heading of this paper, although somewhat allied to it—that was, foremen in charge of departments ought not to be members of any trades society. A good number of those present would have had experience recently of the change it made when a department was under the charge of men who were trades unionists and men who were not. That was a point which, he thought, was very important and ought to be taken into account in making appointments. In Mr. Westgarth's paper he referred to the advisability of binding apprentices. He (Mr. Myles) did not agree with binding them at all; but he thought all employers ought to protect themselves by not taking apprentices from one another. If an apprentice had a difference of opinion with his foreman he went away to some other works and got employment. Probably he was in his last year, when he was most valuable, and the only time he was valuable, perhaps, to those with whom he had been serving his apprenticeship. It was not fair that these changes should be thus encouraged, and employers had the matter entirely in their own hands by refusing to take an apprentice unless with full permission from his previous employer. Continuation classes were a very important detail, and he thought that employers in taking on apprentices ought to insist on their attending evening classes. The real education of an apprentice did not start until he commenced to serve his apprenticeship; he learnt a lot of things at the day school, but really did not see the bearing of them until he had started work. The evening classes were most important, and if something could be done to ensure better attendance at them than there was at any class he had knowledge of, it would be a very great improvement. Premium apprentices, in his opinion, were like others, there were good and bad amongst them, but generally the best premium was good, hard work. He was very strongly of opinion that all officials should be paid a bonus, which ought to be some fixed proportion of the profits made by the firm. That would give the officials, who really had the spending of the firm's money very largely in their hands, a direct interest in carrying on the work economically. Regarding piecework, he was very pleased to hear what was said at the Hartlepool meeting and what was said by the last speaker. There was a great deal in its favour, and it was about the only means by which a superior workman got any return for his superior ability in these

days of minimum rates of wages. He thought piece rates the best way of paying a man, but a very great obstacle always was the difficulty of inspecting the work done. He remembered when he was serving his apprenticeship fitting an engine to drive a factory. That engine had been built on piece, and when they came to try to start it, the connecting-rod fouled the bedplate. That was very much like the difficulty he was afraid would be found in erecting marine engines on piece; but a great amount of detail work could be satisfactorily done on that system. In fixing piece prices it was very important not to fix them too high, because workmen were only human, and wanted to get the most they possibly could for their work, and there was a very strong temptation to work on the "ca' canny" principle. He thanked Mr. Westgarth for his paper, the reading of which had afforded him great pleasure.

Mr. W. DALRYMPLE said he had been associated with piecework for thirty years, and he thought it was a very great advantage to the employer to have his work done, when possible, on that system. He remembered having two tail shafts to get ready. There were only two lathes. One man would not do it on piece. The other who did, finished in twenty-seven hours, while the one on time took fifty-four hours. That was a sort of eye-opener. Whether or not it paid to get more out of a machine, piecework was much the fairest way to pay a man, and it was the only way a man could show his ability. A good man would take care that he worked to his best advantage, and there was an incentive to the ordinary worker to push on. There was a difficulty in the commencement of the piece system; but the way he used to look at it was this: Supposing he had a lot of shafting to machine, by careful observation he got out a sort of factor of the time it should take to turn that shafting. If he watched a man very carefully when he was doing his work, observed his speed of lathe and took particular care to watch the whole operation, he then saw how long it would take to turn a shaft, and when they got the key it was simply a matter of comparison, say, between a 10 inch shaft and a 12 inch shaft. He did not take the weight into account at all, only the surface of the shaft, and that he had found a safe and proper way to get at the rate for piecework. He thought he was very successful in dealing with piecework at that time owing to the very careful observations he had made, and the opinion he had formed was that, in a general way, the system of piecework was the most advantageous both to employer and workman. He might say, in another line of the business which Mr. Fownes thought ought to be kept free from large

engine works, viz., the moulding trade, he tried to carry out the piecework system as far as possible, it had some faults, but the balance was in favour of it, and it encouraged the men to take all the care they possibly could not to neglect the opportunity of ensuring a good casting. Even with all the care taken they sometimes had bad castings, but he believed there were just as many bad castings made on time as piece. As far as the apprentice question was concerned he thought, with the other speakers, it was a mistake to bind lads. He had had them both bound and free, and had come to the conclusion that the safest way for the employers was not to bind them at all. If they did not behave themselves they could pack them off; but when bound they had some difficulty in dealing with them. He thought the paper a most fit one for this Institution, and had given rise to a very enjoyable and, he trusted, a profitable discussion.

The SECRETARY (Mr. Duckitt) said he had a letter from the President on the paper. If he had been present he intended to speak on the subject, and with their permission he would read the communication:—

NEWCASTLE-UPON-TYNE,
15*th February*, 1899.

DEAR MR. DUCKITT,

I am sorry to say that I have been summoned to London for a meeting, so that I shall be unable to be with you at South Shields on Friday evening. I am extremely sorry for this, as I had both wished to go to South Shields, and also I was anxious to say a few words at the completion of the discussion on Mr. Westgarth's paper, and I therefore will ask you to read to the meeting the following remarks:—

When I first read this paper over, and marked the points that I thought would be interesting for discussion, I soon found out that there were something like twenty matters which I should have been glad to have had ventilated by the Institution, and I really feel sorry that so admirable a paper was not divided up into at least three or four, so that more justice could have been done to the many matters therein contained.

I cordially concur in the advice to manufacturers to decide exactly what they want to make, and build their works accordingly. This requires constant self-denial, in refusing apparently attractive business, which is little out of one's regular course, but it is certainly the road to financial success in the long run.

As regards the question of manufacturers having their own forges and foundries, I feel sure that no fixed rule can be made; every case

must be judged on its merits. It must, however, be borne in mind that no firm or company has unlimited capital, and to extend the sphere of operations in one direction very often means to forego much needed improvements in another. It is small gain to a man to build himself a foundry, however convenient it may be, if he is thereby compelled to put up with second rate machinery, because he has not capital at hand to buy something better.

With regard to American *versus* English tools, I shall be sorry to lay down a line; but it has always seemed to me that the marine engine builder is the last man who ought to seek his tools in America. We specially want a few tools of large size and great perfection, and the marine engine building trade has hardly been sufficiently developed in America for them to have made a specialty of these tools to the same extent that our English tool makers have done; but, on the other hand, there are many types of small lathes, milling machines, etc., such as would be used in electrical engineering works and other manufactories of small machinery, where the Americans make an unquestionable success. My own feelings would be to select the tool that I wanted at the moment without much regard whether the make was American or English.

I should like to have said more on the excellent views that are put forward with regard to management, and to the feelings between employers, managers, foremen, and workmen, but the only point on which I will touch is that of apprentices. I have always taken a great interest in the training of our young men, and I am more and more inclined to think it is a very great advantage to adhere to the old system of binding apprentices; but more than this, every apprentice ought to be put through a special course, so as to make him as perfect as possible, either as a fitter, machineman, or whatever branch of the trade he means to follow out.

It has always been our custom to pay for any of our lads to go to evening classes, and to encourage them to do so by every means in our power.

The question of premium apprentices, I should have thought, would not have been sufficiently generally interesting to the Institution to encourage discussion, were it not that such a number of speakers alluded to it, one after the other. My own opinion is, that the system of having premium apprentices is a most excellent one, and in a life-long experience, I am certainly prepared to say that there are not a larger percentage of wasters among premium apprentices than there are among ordinary working apprentices. It seemed, in the discussion, to be generally over-

looked that they were in the works for a wholly different purpose, and in the majority of cases they are doing that which they pay to be allowed to do.

To put their case briefly, premium apprentices must learn to know good work from bad; to know good workmen from bad ones, and to form an idea as to how much work ought to be expected out of any given combination of workmen and machinery. But the special attention he gives may be very much varied, according to his own future prospects and the branch of engineering or manufacturing which he hopes to follow hereafter. I fear that if the system were abolished the average premium apprentice would not come as a working apprentice, but would rather go to some other trade, where he had an opportunity of learning something of the way it was carried on before he could be called upon to embark his life and his capital in it, and the effect of this would be, that less capital would be embarked in the engineering trade, and there would be less demand for the services of our workmen, draughtsmen, and managers.

I would further point out that though the premium goes into the drawing office, he rarely stays there more than from two to three years, while in the majority of cases his future life is such that he makes work for many draughtsmen; in fact, in the long run, he increases the demand for draughtsmen and does not increase the supply.

Of course the great advantage in all manufactories is to keep something like a steady flow of work. This is usually best secured by the manufacturer having some connection of his own, which occurs when he has some interest in ships, collieries, railways, or anything else that gives him a preference in taking orders. I only mention this to show that it is undesirable for the capitalists in any business to embark the whole of their money in the works, as very often they could do better by keeping a certain amount of it free for useful co-operation outside.

The question of profit sharing, or workmen taking an interest in the business, is one on which I would gladly have enlarged, but I do not wish to occupy the time of the meeting any further.

I can only say that I feel personally very much obliged to Mr. Westgarth for his paper, and I trust that we shall have others of the same class.

Yours faithfully,

BENJAMIN C. BROWNE.

Mr. Tom Westgarth being unable to be present, his reply to the discussion was deferred till the next general meeting.

SOME CONSIDERATIONS ON FREEBOARD AND ON THE RELATION BETWEEN SCANTLINGS AND FREEBOARD.

By ARCHIBALD HOGG.

[Read before the Institution, in South Shields, on Friday, February 17th, 1899.]

The Board of Trade freeboard tables recognise three types of steamers, viz.:—A, those not having spar or awning decks; B, spar-deck steamers; and C, awning-deck steamers. In order to obtain the tabular freeboard the ship must be built to Lloyd's classification, or equivalent thereto.

The freeboard tables for A and C are given as approximate only, and we know they do not quite get the reserve buoyancy aimed at. It follows that the tables for B must be in error to the same extent.

The writer has prepared a comparative table (I., page 131), which shows the difference between the freeboards taken from the freeboard tables and that based on the percentage of reserve buoyancy. To simplify matters, flush-deck steamers with no erections, built with ordinary floors to Lloyd's three-deck rule, have been taken throughout. All these ships have the same depth, and therefore should have the reserve buoyancy given at the head of the column in Table A, viz., 28·6 per cent. of the total volume. Each steamer has the rule mean sheer as given in the freeboard tables; the lowest point of sheer is placed at $\frac{1}{10}$ the length abaft amidships. The lengths, breadths, form of hull, and displacements vary. The results on Table I. have been calculated from specially prepared line plans.

It will be found that the difference between the tabular freeboard and that worked out on the 28·6 per cent. basis, varies as much as 4 inches (*i.e.*, for ships having the rule length): the shorter ships, Nos. 8 and 9, have 6 and 7 inches difference. Therefore, if the freeboard is to be regulated by the reserve buoyancy, by using the tables a steamer may be given 2 or 3 inches more or less draught than she ought to have.

By using the tables a ship can gain draught in two ways without increasing the strength at amidships:—Firstly, by placing the lowest point

of sheer at amidships instead of at $\frac{1}{10}$ the length aft (the steamers in Table I. would each thus get $\frac{3}{4}$ inch more draught, because the sheer at amidships is $1\frac{1}{2}$ inches); and, secondly, by increasing the mean sheer at the ends of the vessel. If No. 5 steamer had her mean sheer increased $20\frac{1}{2}$ inches (the limit allowed by the rules) she would gain 5 inches draught nominally, but 4 inches in reality, because her tonnage coefficient is raised from ·713 to ·733, taking $\frac{1}{2}$ inch off, and the lowest point of sheer being 1 inch lower (she has now $2\frac{1}{2}$ inches sheer at amidships) takes another $\frac{1}{2}$ inch off; of the 4 inches gain in draught $\frac{1}{2}$ inch is lost because the extra sheer adds about 12 tons, at least, to the weight of hull, leaving a net gain of $3\frac{1}{2}$ inches draught or deadweight carried. These increases are given to steamers whose draught may already be 2 or 3 inches greater than it ought to be if the reserve buoyancy were the basis of freeboard.

From the freeboard tables and explanatory notes it will be found that all steamers having the same depth should have the same percentage of reserve buoyancy (provided the freeboard is not less than that given on the tables opposite the finest coefficient ·68), and that independent of the length, breadth, and of form of hull. In the opinion of the writer the freeboard of steamers of the ordinary type should not be affected by the breadth or form, but it should on account of the length, because to make the longer ship equally as seaworthy as the shorter one it is necessary to give her a larger freeboard.

It must be admitted that generally no steamer should be laden below a certain limit, no matter how strong she is. The minimum freeboard is not a quantity limited by the strength of the ship but by its seaworthiness. Referring to the Board of Trade freeboard table A, the freeboards fixed by the top line opposite the coefficient ·68 and by the percentage of reserve buoyancy at the head of the columns, give draughts which are about the greatest any sea-going flush-deck ship should be loaded to. By the first the height of deck above water is definitely fixed for ships with fine or full angle of entrance, according to the proportion of beam to length (the fulness of ends of the ship increase with the beam), the percentage of reserve buoyancy not being considered. By the second the height of deck above water may vary as much as 6 inches in ships of the same depth but with different angles of entrance. As far as seaworthiness is concerned the ship might as well be loaded this 6 inches deeper. Full ships are allowed to go to this draught if their beam is sufficiently broad to reduce the tonnage coefficient to ·68. In the comparative

table (I.), where all the steamers are 24 feet deep, the greatest draught under column No. 11 is 19 feet 3½ inches, and the smallest is 18 feet 10¼ inches, a difference of 5¼ inches. The first is given to an exceptionally broad and bad sea boat, while the second is of good proportions, and would be a better sea boat than the first, even if she were loaded to 19 feet 3½ inches draught. In the writer's opinion the freeboard should be stated in feet measurement, and be regulated by the depth and length only, the form of hull and reserve buoyancy being ignored, except in vessels of very unusual form, when the freeboard should be specially considered. The Board of Trade freeboard tables take no account of the form of the ship, although there is given in the tables a range of tonnage coefficients with varying freeboards. A steamer with a coefficient of ·68 can have the same angle of entrance as another of the same length and depth with coefficient ·800. If the percentage of reserve buoyancy is taken as the basis of freeboard, it should be measured from the displacement scale so as to ensure that the right quantity is being left above water.

The freeboard explanatory notes, paragraph 6, on page 3, say:—"Whatever the result of calculation, the freeboard assigned should not be less than would be obtained by taking from the tables the freeboard corresponding to the smallest coefficient for a vessel of the same moulded depth." Thus a steamer 308 feet by 50 feet by 24 feet, with a tonnage coefficient ·786, will get 18 feet 10 inches draught if the tables are used, but if the reserve buoyancy be calculated she will get 19 feet, as is the case with No. 16 steamer in Table I.; also, she will be allowed about 19 feet 2 inches draught if fuller deck lines are used and fuller sections at the deck; the latter draught corresponds to the freeboard opposite the smallest coefficient, ·68. From this and what has been said above, it may be asksd, why not load all ships of this depth and length to this freeboard? Freeboard is the measurement of the height of deck above water, not the volume of the ship above water.

The writer suggests that the minimum freeboard should be regulated by a table like that shown on Table II., page 132.* This would fix definitely the maximum draught for flush-deck steamers, provided the mean sheer was at least as per rule, and not beyond the limit allowed, *i.e.*, 1½ times the rule sheer. The depth of ship taken should be the depth amidships at the side of the ship, minus half the rise of floor. The reason for this correction will be shown by the following example:—Given a steamer 288 feet by 42 feet by 24 feet, with tonnage coefficient ·68 and rise of floor 9 inches, she will get a winter freeboard of 4 feet 10½ inches. Take

this steamer, keep the upper portion of form as before, but alter the bottom by lowering the keel 12 inches, making the depth 25 feet; make the rise of floor 24 inches, while keeping the same total volume as before, and she will get a winter freeboard of 5 feet 2 inches, which is equivalent to losing 3½ inches draught, or 80 tons deadweight.

So far the writer has spoken of the minimum freeboard beyond which a ship should not be loaded. In trades where light cargoes are carried, such as cotton or others of varying stowage, a vessel of the ordinary depth does not have sufficient capacity to load her down to the full draught; consequently, it is necessary either to add a complete deck space, or part, above the upper deck, or increase the depth of vessel to the extent required to obtain the necessary stowage capacity; the extra depth, being put on above water, increases the freeboard without adding to the draught or deadweight carried. In such steamers, with increased freeboard, the depth of girder is greater than in the ordinary vessel, consequently lighter scantlings are required to get equal strength.

The freeboard being fixed, whether at the minimum draught or less, the scantlings should be made to suit, *i.e.*, regulated according to the displacement and to the distribution of displacement. A fine steamer would be expected to have lighter scantlings than a full one of the same dimensions; for instance, her floor plates would be reduced in thickness nearer amidships, and so on.

That there should be a relation between the scantlings and the freeboard is shown by the freeboard explanations, which say on page 9:—"The freeboard of all other iron and steel vessels, classed or unclassed, should be regulated by the same standard (Lloyd's), the increase of freeboard required in each case, being determined by the limit at which the stress per square inch upon the material of the hull amidships, shall not exceed that of the standard class, of the same proportions, form, and moulded depth, when loaded to the freeboards required by Table A." It goes on to say that spar and awning-deck steamers are subject to the same modifications; and also, on pages 11 and 12 of the memorandum of explanatory notes, by the method of comparing scantlings which is given there.

What is this stress per square inch amidships in the standard class (how many tons), which is not to be exceeded? and how is this stress to be calculated?

Assuming that the severest stress which a ship has to sustain is that when she is rested on the crest of a wave of her own length, the steamer being filled with a homogeneous cargo and loaded to her winter draught,

the writer finds that vessels of the same size and class built to Lloyd's have a range of greatest stress varying as much as 1½ tons per square inch.

Steamers Nos. 5 and 12 on Table I., page 131, were taken for the calculation; and also the same vessels, as spar-deck steamers, but with the depth increased so as to get the same displacement. The greatest stress for No. 5 was 5·2 tons; No. 12 was 7 tons; and for the spar-deckers, 4·8 and 6·4 respectively.

As the manner of taking the stress found above is open to question, the writer would suggest that shipbuilders be provided by the Board of Trade or Lloyd's with instructions telling how it is to be taken, or with formulæ which can be worked to, meeting this point of providing sufficient scantlings for steamers with "any" freeboard, stating what the greatest stress has to be in all cases of fine or full, small or large steamers.

The above figures show that the stress per square inch is not the same in two ships of the same form and displacement, the one being a three-decker and the other a spar-decker. The three-deck steamer is under the greatest stress by over ⅓ ton per square inch.

There seems to be a discrepancy in the strength of the transverse framing of these two ships. The frame and reverse frame of the spar-decker are each ½ inch smaller on one flange, and her floor plates $\frac{1}{20}$ inch less in thickness and ½ inch less in depth, than those of the three-decker. The spar-deck floors are not so well supported with keelsons. Being exactly similar in form and displacement, the stress which the framing has to sustain must be similar also. Lloyd's rules say that spar-deck steamers are those having lighter construction (than three-deck rule), and that this does not imply that the vessel is of less strength in relation to the deadweight carried at a suitable load-line. (The spar-decker in the above case, No. 12, has the greater deadweight because of her lighter hull.) There seems no reason why the spar-decker's framing should be lighter or different from the three-decker's, except that the side frames should be heavier in the spar-deck steamer because of her greater height of main deck above top of floors.

Lloyd's scantling tables are provided for three types or classes of flush-deck steamers, but not for those coming in between or over. Why not have tables or formulæ such that, for a given draught, a steamer could be built having the minimum freeboard or any increase of freeboard above—such a system by which all increases in weight of hull would be gradual, instead of sudden leaps from one grade to another?

At present some ships, if 3 inches deeper, would require an extra side stringer, adding probably 25 to 30 tons right away.

Lloyd's scantlings are taken as the standard of strength for flush-deck steamers, in order to obtain the Board of Trade freeboard; therefore no extra draught should be allowed for excess of sheer, unless some addition be made to the longitudinal material; also, no extra draught should be allowed for erections on deck, unless such are constructed so as to increase the strength of the ship, or other equivalent strengthening be added. But a few inches more draught or deadweight does not perceptibly affect the scantlings, so that, as far as strength is concerned, a Lloyds flush-deck steamer may safely be loaded a little deeper, except where the erections are excessive or at the ends of the vessel only, and intended for the stowage of cargo. Where the extra draught is considerable the erections should form part of the strength of the ship, and additional strength should be added amidships where the extra deadweight carried is put into a poop and forecastle.

If shipbuilders were provided with guiding formulæ for each detail in the construction of a steamer, and were given a free hand in the choice of sections of steel, no doubt many improvements would soon be developed. Shipowners would get exactly the size of steamer wanted without requiring to alter dimensions to suit Lloyd's grade; they would get exactly the capacity wanted, and probably would be saved many tons of material, especially in the finer vessels, while a just tax would be put on the long and on the full box-ended steamer of the present day.

Dept Mould Amidsh – ½ R of Flo	½	¾	5′ 0″	¼	½	¾	5′ 1″	¼	½	¾	5′ 2″	¼	½
Ft.													
23	...	...	...	...	...	...	...	...	...	...	...	...	...
23	...	...	...	...	...	...	...	...	...	...	...	...	...
23	...	...	...	...	...	...	...	...	...	...	...	...	...
23	...	...	...	...	...	...	...	...	...	...	...	...	...
23	...	304	...	...	...	...	...	...	...	...	...	...	...
23 1	...	...	...	306	...	...	...	...	...	...	...	...	...
24	...	298	...	...	...	...	308	...	...	...	...	...	...
24	...	...	...	300	...	...	...	...	...	310	...	...	...
24		292	...	...	...	...	302	...	...	...	...	312	...
24	...	...	...	294	...	...	...	...	...	304	...	...	...
24		286	...	...	...	...	296	...	...	...	...	306	...
24 1	...	...	...	288	...	...	...	...	...	298	...	...	...
25		280	...	...	...	...	290	...	...	...	...	300	...

T figure above the length of 298, which is opposite the depth of 24 feet,

N t been modified for the correction to the moulded depth.

Table I.—Freeboard of Flush-deck Steamers. (Three-deck Rule.)

No.	Dimensions.	Mean Entrance in Beams.	Tonnage.		Displacements (Tons).					Table Winter Draught.	28·6 per Cent. Reserve Buoyancy, Winter Draught.
			Tons.	Coefficient.	Total to Top of Deck.	To Winter Draught.	Reserve Buoyancy.	Per Cent. of Total.	To Winter Draught at 28·6 per Cent. Reserve Buoyancy.		
	Ft. Ft. Ft.					← - - -	As per Tables.	- - - →		Ft. In.	Ft. In.
1	288 × 50 × 24	1·71	2,351	·715	7,520	5,360	2,160	28·8	5,370	19 3¼	19 3½
2	288 × 42 × 24	2·04	1,969	·710	6,214	4,510	1,704	27·5	4,434	19 3½	19 0½
3	288 × 34 × 24	2·51	1,571	·702	5,010	3,655	1,355	27·1	3,580	19 3¾	19 0
4	308 × 50 × 24	1·83	2,519	·717	8,058	5,665	2,393	29·7	5,750	19 0¾	19 3½
5	308 × 42 × 24	2·18	2,116	·713	6,660	4,748	1,912	28·8	4,755	19 1	19 1¼
6	308 × 34 × 24	2·70	1,685	·703	5,368	3,860	1,508	28·0	3,833	19 1¼	19 0¼
7	268 × 50 × 24	1·58	2,185	·714	6,980	5,056	1,924	27·6	4,980	19 6	19 3
8	268 × 42 × 24	1·89	1,822	·704	5,771	4,250	1,521	26·4	4,121	19 6¼	19 0¼
9	268 × 34 × 24	2·32	1,459	·699	4,651	3,445	1,206	25·9	3,320	19 6¼	18 11¼
10	288 × 42 × 24	1·05	2,328	·839	7,514	5,375	2,139	28·5	5,364	18 10¾	18 10¼
11	288 × 34 × 24	1·36	1,863	·830	6,055	4,307	1,748	28·9	4,325	18 11	19 0
12	308 × 42 × 24	1·13	2,495	·840	8,022	5,673	2,349	29·3	5,722	18 8¼	18 10¼
13	308 × 34 × 24	1·45	1,998	·833	6,478	4,560	1,918	29·6	4,628	18 8½	18 11½
14	268 × 42 × 24	·96	2,162	·838	7,006	5,057	1,949	27·8	5,005	19 1¼	18 11¼
15	268 × 34 × 24	1·26	1,729	·829	5,631	4,057	1,574	28·0	4,021	19 1½	18 11½
16	308 × 50 × 24	1·34	2,754	·786	8,918	6,300	2,618	29·4	6,368	18 10	19 0
	(1)	(2)	(3)	(4)	(5)	(6)	(7)	(8)	(9)	(10)	(11)

DISCUSSION.

The VICE-PRESIDENT (Mr. J. M. Rennoldson) thought Mr. Hogg's paper was one that raised a large number of important points, and should be fruitful in producing a healthy discussion. He did not pretend to go into the merits of it, not being a shipbuilder, but at a glance one could see there was a large number of important matters touched upon which must be of great interest to those specially engaged in this department of business connected with their Institution.

Mr. C. RENNOLDSON thought the thanks of the Institution were very much due to Mr. Hogg. Anyone who had had anything to do with the puzzle that the Board of Trade had made in the freeboard tables could really sympathise with the amount of work which Mr. Hogg must have gone through to get them so much at his finger ends. He did not know anything that the Board of Trade had ever done that was really calculated to give more headaches than their freeboard tables. However, there was one point in their own particular line of business—they had not much to do with freeboard tables, they were not applicable to the class of vessel they built—but there was one thing mentioned by Mr. Hogg that touched him nearly—Lloyd's grade system. Now, the scantlings for a vessel of, say, 120 feet were the same scantlings that ran up to about 160 feet, and the thing was altogether out of proportion. As Mr. Hogg had said, they went a foot in length, or 3 inches in beam, and at once they were over the grade, and heaven and earth could not move Lloyd's. They might go to London, and might urge and pray, and show certain reasons, but the cast-iron rule was there, and if their ship was an inch over, "there is your grade." That they must stick to. The British Corporation rules were much more applicable, he believed, to the development of a good ship, well arranged, than Lloyd's. There, if they advanced a foot or an inch in length, breadth, or depth, they could get a fairly proportionate increase. That was one of the reasons why he did not see—considering that there was another registration association, where it was always possible for shipowners to get any size of steamer, and have dimensions always to suit—they were tied up to build to suit Lloyd's. The point that touched him was the cast-iron grade system. It would be a very good thing to have it tapered off, the one into the other.

Mr. GEO. N. ARNISON said he had not had an opportunity of going fully into the paper, but he did sympathise with the writer in the points he had brought forward, and particularly where he referred to the fact that finer vessels were penalised by Lloyd's rules. That was a subject which had been brought forward over and over again. He could not himself see why they should not have introduced into the tables of scantlings the coefficient of displacement in some form or another, the scantlings being made lighter for a low coefficient of displacement, keeping them, say, at the present point for the fullest class of vessel. Mr. Hogg pointed out that with the existing tables the strength of vessels varied considerably, and from his figures, which he (Mr. Arnison) had every reason to believe were accurate, it appeared that some vessels went to sea with 25 per cent. less strength than others, and yet in accordance with Lloyd's rules. There could not be a clearer demonstration that Lloyd's rules were faulty and wanted attention. Mr. Hogg had expended a great deal of time in preparing this paper, and deserved their best thanks, and it was to be hoped other members would give them their views on the important questions raised.

Mr. M. C. JAMES said he wished to compliment Mr. Hogg on his very able paper. He had only read it that night for the first time, and, therefore, was not quite prepared to deal with it as fully as he would like. First of all, he thought it was a very bold undertaking on Mr. Hogg's part, but he was quite justified in declining to accept unquestioningly the present freeboard tables, for no doubt there had been too great a disposition all round to take these tables as absolutely right, and beyond question or criticism. Mr. Hogg had discarded that altogether, and used his own brains, and critically analysed the whole subject for himself. The freeboard question was full of knotty points. He (Mr. James) had followed it closely from the time when there were no tables right up to the present, and he consequently knew something of the difficulties that had to be contended with when these tables were being formulated. He thought it was generally allowed that the formation of tables based on a coefficient like that now taken was a very rough way of getting approximately at the surplus buoyancy. No doubt certain irregularities had crept in which were very difficult to keep out of the rules. These irregularities were much greater now than when these tables were first formulated, on account of the many alterations that had since taken place in the forms of ships, depth of floors, systems of framings, modifications

in tonnage measurements, etc. He remembered the late Prof. Jenkins of Lloyd's—who was chiefly responsible for these rules—coming round the various shipbuilding districts, and he (Mr. James) had a long conversation with him at the time they were brought out. Prof. Jenkins had rough and ready ways of his own for making corrections in abnormal cases that might crop up, such as where double bottoms were not continuous, and so on, Some of the things Mr. Hogg had pointed out were really foreseen by those who compiled these tables; but he (Mr. James) thought a good case had been made out for the freeboard tables being amended and put on some such basis as Mr. Hogg had proposed. Anyone who had to work out freeboards would find it was merely a loss of time to struggle with a lot of figures that at the end left one practically in the same position as when he started; and if they went to Lloyd's they were not much better off than before, because there were one or two people in White Lion Court connected with the inner working of these rules, and they alone knew what these allowances really were. He defied anybody to work out the freeboard for a modern vessel of the spar-deck type and say with absolute confidence "that is the freeboard she will get;" how and why all these mysterious allowances were given was only known to a few members of Lloyd's scientific staff in London. He was not wanting to be taken for one who approved of the unreasonable railing that was sometimes raised against Lloyd's, because he considered that society did excellent work in the preparation of these tables. The tables were very cleverly constructed and fairly efficient if they looked at them all round. They were greatly indebted to the principal surveyor (Mr. Martel) and especially to the late Prof. Jenkins for having got up these tables. One did not want to be too hard on Lloyd's in this matter, as it must be admitted they did the hard work. Anyone who remembered the struggles they had with the old rule-of-thumb Board of Trade rules would readily admit the present tables were a great advance upon those very unsatisfactory tables the late Sir Digby Murray of the Board of Trade was so fond of. To come to the more important question of the relationship of scantling to freeboard, he was afraid what with the alterations and improvements in the construction of ships, the rules were now all confusion. Take the spar-deck type of ship: they had been working them with a certain freeboard for some years—until somebody suddenly wakened up to find these freeboards were all wrong, and they were referred back to the scantlings in vogue about 1886, or the year when these tables were brought out or compiled. On this basis they had been entitled to reductions of from 2 to 4 inches,

and even more; now they had been told the freeboards originally assigned to these vessels were absolutely wrong, and there were dozens of spar-deck ships at work to-day that had had their freeboards reduced in that way. Mr. Hogg drew attention to the extraordinary and hard-to-understand reductions in the scantlings of spar-deck ships. He (Mr. James) considered the reduction in scantlings of the spar-deck beams as compared with those of the upper-deck in three-deck ships was against common sense, and Mr. Hogg also pointed out that the reduction in freeboard in some cases, where the floors were lighter in the spar-deck ships, were without rhyme or reason whatever. He further referred to the use of a formula which did not take into consideration the strength. He remembered reading a report of Mr. Macfarlane Gray of the Board of Trade and Mr. Jenkins of Lloyd's. Mr. Gray had one method of getting out the stress, and Lloyd's had another; these reports, together with accounts of the discussions upon them, were to be found in volume ii., pages 243 to 247, of a now defunct journal called *The Steamship*, which would be found in their library at Newcastle. The construction and basis of these rules was then gone into in great detail, all the formulæ thoroughly discussed, and Mr. Macfarlane Gray and Mr. Martel each defended their pet formulæ with great warmth. He (Mr. James) thought this paper a most valuable contribution to the *Transactions* of the Institution, and Mr. Hogg was entitled to their hearty thanks for it.

Mr. John H. Heck (of Lloyd's Register) said Mr. Thearle had intended to speak on this question, but had been called away to Edinburgh during that afternoon. He (Mr. Heck) had been engaged with freeboards, and wished to say that the tables were based on results arrived at by many calculations on numerous vessels. They were got out in the interest of shipbuilders and shipowners, after a good deal of consideration, labour, and consultation. The tonnage coefficient enabled a freeboard to be more quickly assigned than would be the case if calculations had to be made for each vessel. It would add to the value of the paper if Mr. Hogg would attach to it full plans and particulars of the vessels he referred to, so that check calculations could be made in order to verify his figures. Some years ago, similar statements having been made, it was found, when the matter was gone into with the help of the drawings and full particulars, that the difference arrived at by employing the tonnage coefficient and by actual calculation was very trifling. In regard to what had been said about Lloyd's rules and calculating on a theoretical basis the strength of a

vessel when on a wave crest or hollow at sea, the usual method of doing this was only good for comparison, and no measure of the actual stress sustained by a vessel at sea when in a storm. The problem was a dynamical and not a statical one, and this was amply illustrated by experience with some of the early oil steamers and deep tanks which had been only partially filled with water. It was also to be noted that Lloyd's surveyors had done something to help on, and had made many additions to the literature on, the subject of theoretical calculations in regard to the strength of vessels. The rules were the outcome of experience; all those who had been familiar with the subject had been consulted from time to time in their compilation. They were perhaps not quite perfect; still, any suggestions as to their improvement have always been treated with consideration. Sometimes it was argued that there were too many rules, but the writer of this paper appeared to wish a few more and extra formulæ. Lloyd's Book of Rules, however, were the best formulæ one could have, as it enabled the scantlings to be quickly determined in a practical manner. At the same time, it was to be kept in mind that the Institution appointed a number of members on the Technical Committee on Lloyd's Register, and certainly there could be very little doubt of the very great assistance the committee had rendered to shipowners and shipbuilders in regard to freeboard and other questions.

The discussion was then adjourned.

On the motion of Mr. G. Robson, a vote of thanks was accorded to the Vice-President (Mr. J. M. Rennoldson), who congratulated the members on the very excellent attendance. This was the third meeting held at South Shields, and on every occasion they had had a very good muster indeed, and it was very gratifying.

The meeting then dissolved.

NORTH-EAST COAST INSTITUTION OF ENGINEERS AND SHIPBUILDERS.

FIFTEENTH SESSION, 1898-99.

PROCEEDINGS.

SIXTH GENERAL MEETING OF THE SESSION, HELD IN THE LECTURE HALL OF THE LITERARY AND PHILOSOPHICAL SOCIETY, NEWCASTLE-UPON-TYNE, ON FRIDAY EVENING, MARCH 24TH, 1899.

SIR BENJAMIN CHAPMAN BROWNE, D.C.L., J.P., PRESIDENT, IN THE CHAIR.

The SECRETARY read the minutes of the last General Meeting, held in South Shields, on February 17th, 1899, which were approved by the members present, and signed by the President.

The ballot for new members having been taken, the President appointed Mr. T. Putnam and Mr. W. Mace to examine the voting papers, and the following gentlemen were declared elected:—

MEMBERS.

Barnard, Robert, Electrical Engineer, 11, Guildford Place, Heaton, Newcastle-upon-Tyne.

Bell, Joshua Robson, Ship Draughtsman, 40, Hill Street, Jarrow-on-Tyne.

Kirby, John Storne, Marine Engineer, 19, Lily Avenue, Jesmond, Newcastle-upon-Tyne.

Macgregor, W. L., E. Surveyor, 22, Cecil Street, North Shields.

Moffatt, William Graham, Draughtsman, 44, Lennox Avenue, Scotstoun, Glasgow.

GRADUATES.

Danielsen, John William, Engineer, 24, Cardigan Terrace, Heaton, Newcastle-upon-Tyne.

Robinson, Frank Bertie, Engineer, 10, Dickinson Crescent, Gosforth, Newcastle-upon-Tyne.

Robson, George, Jun., Apprentice Engineer, 9, Wellington Terrace, South Shields.

Watson, Kenneth, Engineer, 3, Rosella Place, North Shields.

Williams, Edward, E. Draughtsman, Bradley Terrace, Walker-on-Tyne.

INVITATION TO THE INSTITUTION OF NAVAL ARCHITECTS.

The PRESIDENT intimated that the Council of their Institution had given an invitation to the Institution of Naval Architects to hold their summer meeting in Newcastle. They said they would be extremely pleased to do so; the day was not exactly fixed, but they hoped to come about the last week in June or first week in July. He trusted they would all do their best to make their meeting an instructive and interesting one.

The SECRETARY read Mr. Tom Westgarth's reply to the discussion on his paper on "Works' Organisation."

The discussion on Mr. A. Hogg's paper on "Some Considerations on Freeboard and on the Relation between Scantlings and Freeboard" was resumed.

The following papers were read and discussed:—

"Notes on the Manufacture of Shafting for Screw Steamers, with some Causes of Defects and Failures," by Mr. E. C. Chaston.

"Remarks on the Increasing Frequency of Failure of Propeller Shafts," by Mr. F. Caws.

DISCUSSION ON MR. T. WESTGARTH'S PAPER ON "WORKS' ORGANISATION."

Mr. Tom Westgarth, being unable to be present, owing to ill-health, the SECRETARY read the following reply to the discussion on his paper on "Works' Organisation":—

DEAR MR. DUCKITT,

The discussion on my paper has been so complete that I do not think there is much to say in reply. I think Mr. Summers Hunter's suggestion to regard the salary of managers and foremen as capital in the works and to pay a dividend upon the amount is a very good one.

Mr. Borrowman and Mr. Myles appear to think that weekly returns of costs are of very little use, whilst Mr. Spence agrees with me that such figures may be very useful indeed. I agree with Mr. Borrowman when he says that the cost of a job should be properly considered before it is commenced, but I think the majority of our members, particularly those engaged in the practical management of works, will appreciate the importance of having cost returns whilst the work is in progress as a means of checking any possible slackness; and it is better to be able to make an effort to reduce the cost whilst the work is in hand, than to find it out only when the work is finished and it is too late to do anything.

I think Mr. Fothergill's remarks as to premium apprentices are well answered by Sir Benjamin Browne's carefully considered letter.

Mr. Withy, Mr. Borrowman, and Mr. Fownes raised the question of sharing losses. I think the way to get over this is to fix the remuneration of the profit sharers at a minimum, so that if they do not receive any bonus by way of profit shared, they are really sharing the loss by reason of the lower standing wage.

Mr. Mills and Mr. Cowens spoke of the American system of paying piecework upon an increasing scale as the output advances. I believe this system is a very good one, and is already in operation in some of the workshops in the Clyde district. It appears to me to be well worthy of careful consideration.

Mr. Henderson mentioned the great difficulties under which works managers labour, and I quite agree with him that the position of works manager is one of the most difficult properly to fill. The success of a manufacturing business must depend very largely upon the works manager and senior foremen.

I give below extracts from a very interesting letter which I have received from one of our members (Mr. Crosier), describing certain arrangements in the works of Messrs. Meldrum & Co.:—

The firm have for a considerable time been giving very special attention to measures for the promotion of a better feeling between themselves and their employees, and greater interest on the part of the latter. They have for years paid the fees of any of their young men who desired to attend evening classes; more recently they have established a works committee, comprising the head draughtsman, works manager, machine superintendent, foreman patternmaker, and two or three of their travellers, one of the last-named being secretary to the committee. One of the partners of the firm is chairman, and his son assistant secretary. The rank and file of the workmen are not yet really represented, but this is merely waiting to be arranged for. A suggestion box is placed in the works, and upon it a notice which intimates that if anybody, from the manager down to an office boy, stoker, or labourer, has got an idea as to improved methods of work, improvement in the manufacture, or improved comfort for the men, or anything else that he thinks will be for the advancement of the business, he is to put it down in black and white, sign his name to it, and put it into the box. The chairman (one of the partners) keeps the key, and personally goes into the suggestions that are made (they may be complaints); but if a man has a legitimate case or grievance the manager likes to look into it. If he finds any suggestion is worth consideration, it is brought before the works committee. In bringing up the matter no name is mentioned. This ensures impartial criticism. Any suggestions that are made and acted upon receive suitable recognition according to their value. The meetings of the committee are held during work time, and occupy about two hours per week, which at first seemed a serious expenditure of time, but the experience is that the time is found to be most profitably spent.

Yours faithfully,
TOM WESTGARTH.

The PRESIDENT was sure they would allow him to propose from the chair their hearty thanks to Mr. Westgarth for his valuable and interesting paper. He only wished they could have more of the same sort.

The vote was accorded by acclamation.

ADJOURNED DISCUSSION ON MR. A. HOGG'S PAPER ON "SOME CONSIDERATIONS ON FREEBOARD AND ON THE RELATION BETWEEN SCANTLINGS AND FREEBOARD."

Mr. S. J. P. THEARLE (Lloyd's Principal Surveyor at Newcastle-upon-Tyne) was sorry that circumstances prevented him from being at South Shields on the occasion of the last meeting of the Institution, as it would have afforded him much pleasure to have spoken upon Mr. Hogg's paper, as well as upon some of the remarks made by those gentlemen who took part in the discussion upon it. To begin with the latter, he said his friend (Mr. Rennoldson) seemed to feel he had a grievance because two small steamers, one 120 feet long and the other 160 feet long, came within the same range of scantling grades, and said he considered that Lloyd's rules are defective in this particular. Mr. Rennoldson also objected to their rules being administered rigidly. Now, he thought Mr. Rennoldson would agree with him, upon reflection, that rules are made to be adhered to and not to be broken. If a vessel's numbers for scantlings are within the limits of certain grades there can surely be no unfairness nor impropriety in taking out the scantlings in accordance with the requirements for those grades. And then in regard to tapering off the grades, if Mr. Rennoldson would again look at the tables for scantlings he would find that the differences between the requirements of consecutive grades is so small that it is impossible to usefully divide them. He appealed to Mr. Rennoldson and to the other shipbuilders present to say if they really desired any smaller unit of thickness for steel material than $\frac{1}{20}$ inch? For his own part, speaking as one with some experience in the surveying of ships, he did not believe that the division of scantlings into fortieths of an inch was anything more than a delusion and a fad. The unit of $\frac{1}{20}$ inch was small enough for the average man to measure, and small enough for the steel manufacturers to adhere to with any certainty of accuracy. Moreover, in his opinion, shipbuilders did not desire a smaller unit, nor did they desire breaks of fortieths in the scantlings of frames, etc., at various fractions of the length of a vessel. A great point nowadays is prompt delivery of materials at the shipyard, and this is not secured by ordering a multiplicity of sizes or by ordering a great many small batches of bars of various shades of thickness. He believe that if his friend (Mr.

Rennoldson) further thought out the matter he would find that what he asked for was not a desirable thing to have. He (Mr. Thearle) did not pretend that Lloyd's rules were perfect any more than other work of man's hands is found to be, but he did think that every pains had been taken in preparing those rules to ensure that the grades for scantlings of frames, shell plating, stringers, etc., should not have the same breaks, but that they should overlap one another so as produce the tapering off which Mr. Rennoldson desired.

His friend (Mr. James) referred in his speech to the authorship of the Board of Trade freeboard tables, and in the warmth of his affection towards their mutual friend, the late Prof. Jenkins, attributed to him the credit of having prepared those tables. He (Mr. Thearle) had no desire to detract in the slightest degree from the credit due to Prof. Jenkins for his share in the labour of dealing with the many details to be attended to in the application of those tables to specific cases, but at the same time he felt that justice should be done where justice was due. The real author of the freeboard tables was Mr. B. Martell, the chief surveyor to Lloyd's Register, and if the gentlemen present would refer to the *Transactions of the Institution of Naval Architects* for the year 1874, they would there find a paper by Mr. Martell on freeboard, containing the essence of the present freeboard rules and tables as suggested by himself and his assistants. For many years freeboards were assigned to vessels by Lloyd's Register at the request of their owners before Parliament made a fixed load-line compulsory, and these tables were used for the purpose. By comparing them with the Board of Trade tables now in use, it would be seen how little change was made in them by the Load-line Committee when they adopted them and recommended that they be made compulsory by law.

He would now come to Mr. Hogg's paper, and in referring to it he would first remark that, as indicated by what he had just said, the freeboard tables and rules so freely criticised by that gentleman were started in the office of Lloyd's Register in London as far back, he thought, as the early seventies. Afterwards, when Parliament determined to legislate upon the question, these rules and tables came under the consideration of a powerful and representative committee, by whom, in their present form, or practically so, the tables were adopted. Looking at the names of the gentlemen who sat upon that committee, it will at once strike one how well calculated it was to secure the confidence of the public in its decisions. The names were :—Sir E. J. Reed (chairman), Messrs. W. Denny, Robert Duncan, James Dunn,

Francis Elgar, Sir Thomas Gray, Sir William Gray, Sir James Laing, B. Martell, Sir Digby Murray, T. B. Royden, and Sir Thomas Sutherland, with Reginald Bingham as secretary. He asked them whether it was reasonable to suppose that rules and tables adopted by such a committee as that, after a protracted enquiry and after using every means at its disposal for obtaining information on the subject—whether it was reasonable to suppose that rules and tables so formulated would be of the faulty, flimsy character such as Mr. Hogg would have them to believe? He held that the presumption was in favour of the committee and their tables. Nevertheless, he admitted that they were but a human production, and consequently, in all likelihood, imperfect. The early imperfections had been attended to by two subsequent committees—one in 1892 and the other last year. The 1898 committee consisted, among others, of representatives of the assigning authorities, such as Lloyd's Register, the Board of Trade, Bureau Veritas, and British Corporation; and the tables, as they now stand, are the result of the careful consideration, reconsideration, and amendment which had taken place in 1890, 1892, and 1898. And now, after the time and skill which had been brought to bear during so many years upon so difficult and complex a subject, they had Mr. Hogg coming forward with proposals for revising the freeboard tables according to his ideas. Well, he did not know Mr. Hogg, and, as far as he knew, he had never seen the gentleman; but he felt compelled to say that he admired the courage he had displayed in tackling this big subject. Whatever else one might feel, it must be conceded that Mr. Hogg had the courage of his convictions. It was quite right and proper that every man who believed that errors were being circulated should do his best to remove those errors, and try to leave the world wiser than he found it. But when a man sets out on this kind of mission he ought first to be quite sure of his facts. He should take good care that he fully understood the subject he was criticising, and that what he imagined to be errors were really so. If he failed to do this, it were better that he left the whole subject for someone else to deal with who was better equipped for the fray he had invited.

It happened that Mr. Hogg was in the unfortunate plight of having come here to criticise the Board of Trade rules and tables for freeboard without first having mastered or understood them. Hence, as a consequence, Mr. Hogg's criticisms fell to the ground. He would point out to them wherein Mr. Hogg's errors consisted. On page 125 of his paper, Mr. Hogg used these words:—"All these ships have the same depth, and therefore should have the reserve buoyancy given at the

head of the column in Table A, viz., 28·6 per cent. of the total volume." In this Mr. Hogg was wholly wrong. Only the vessel of 24 feet moulded depth, which is of twelve depths in length, has 28·6 per cent of reserve buoyancy. The 268 feet long vessel is under twelve depths in length, and hence will have less than 28·6 per cent. of reserve buoyancy; while the 308 feet vessel, being of more than twelve depths in length, has more than 28·6 per cent. of reserve buoyancy. At the foot of the table Mr. Hogg would see that the scale of these allowances is there given, and if he had made corresponding allowances in his calculations he would not have been betrayed into offering for their consideration such a string of errors as is to be found in the last column of his Table I. Take, for instance, the steamers in that table known as Nos. 8 and 9, regarding which it is attempted to show that the Board of Trade tables result in an error of about 6 inches in each case. Had Mr. Hogg understood those tables he would have found that there is a very close agreement between the tabular freeboards and those which the surplus buoyancy would show on a displacement curve. His further statement on page 125, viz., "it will be found that the difference between the tabular freeboard and that worked out on the 28·6 per cent. basis varies as much as 4 inches (*i.e.*, for ships having the rule length); the shorter ships, Nos. 8 and 9, have 6 and 7 inches difference" was, therefore, also in error.

On page 126 of his paper Mr. Hogg went on to say:—"From the freeboard tables and explanatory notes it will be found that all steamers having the same depth should have the same percentage of reserve buoyancy (provided the freeboard is not less than that given on the tables opposite the finest coefficient ·68), independent of the length, breadth, and form of hull. In the opinion of the writer, the freeboard of steamers of the ordinary type should not be affected by the breadth or form, but it should on account of the length, because to make the longer ship equally as seaworthy as the shorter one it is necessary to give her a larger freeboard." In the front part of this paragraph Mr. Hogg repeated the blunder already pointed out in supposing that all steamers of the same depth have the same percentage of surplus buoyancy; but it was interesting to notice that in the second part of the paragraph he stated that in his opinion a course should be adopted which is actually practised by all the assigning authorities under the Act of Parliament.

On page 127 of his paper Mr. Hogg said:—"The Board of Trade freeboard tables take no account of the form of the ship, although there is given in the tables a range of tonnage coefficients with varying

freeboards. A steamer with a coefficient of ·68 can have the same angle of entrance as another of the same length and depth with coefficient ·800. If the percentage of reserve buoyancy is taken as the basis of freeboard, it should be measured from the displacement scale so as to ensure that the right quantity is being left above water." Now, he (Mr. Thearle) had been engaged during the past twenty years and upwards in applying these and the earlier freeboard tables in determining the load-lines of vessels, and in his experience the determination of the coefficient of fineness from a vessel's length, breadth, depth of hold and under deck tonnage, gives a result which is correct for all practical purposes, and closely agrees with what is obtained by using the displacement scale of the vessel. In fact it was only reasonable that they should do so provided the tonnage is correctly measured; and he had every reason to believe the tonnage figures given by the Board of Trade surveyors are accurate. Hence the Board of Trade freeboard does take account of the form of a vessel, and Mr. Hogg was mistaken in supposing the case to be otherwise. In saying this, he (Mr. Thearle) was speaking of ordinary ship-shape vessels and not any monstrosity of form such as might be imagined but never be built.

Again on page 127, Mr. Hogg said :—"Freeboard is the measurement of the height of deck above water, not the volume of the ship above water." Again, he (Mr. Thearle) would remark that for all ship-shape vessels, the height of the vessel's deck above water was the measure of the volume above water also.

He was sorry that time would not permit of his dealing with all the errors in Mr. Hogg's paper, but he would like to refer to the statement found on page 128, that "The freeboard being fixed, whether at the minimum draught or less, the scantlings should be made to suit, *i.e.*, regulated according to the displacement and to the distribution of displacement. A fine steamer would be expected to have lighter scantlings than a full one of the same dimensions; for instance, her floor-plates would be reduced in thickness nearer amidships and so on." This was a refinement in scantling adjustment and in the differentiating of scantlings throughout a vessel which was rather beyond the bounds of practical application, and it was doubtful whether shipbuilders would seek to avail themselves of it even if tables of scantlings could be prepared in accordance with the idea. That idea was not however a new one. So far back as the year 1888, when the present rules for steel vessels were being prepared, the committee of Lloyd's Register enquired of the shipbuilders of Great Britain whether they would prefer to have the

scantlings in the new rules taken from the tables in the manner now adopted, or whether they would like to have an arrangement whereby the form of the vessel should be taken into account. Speaking from memory, he believed only one or two builders desired to have so intricate a method adopted, the remainder preferred a system which permitted of rapidity of work and which gave scantlings suitable for ordering from the steel maker with a reasonable prospect of prompt delivery. They felt that simplicity in the work of taking scantlings from the tables was most important in their drawing offices and that the readiest mode was the best for all concerned. Besides, with such refinements of thicknesses as would be introduced, it would be impossible for an ordinary man working with callipers and a rule to accurately measure them, and if not accurately rolled no advantage would be gained.

Mr. Hogg and some of the gentlemen who took part in the debate had referred unkindly to their old friend the spar-decker. Well, Lloyd's Register was not responsible for the spar-decker, they found the article already devised by others, and consequently had to deal with it both as regarded scantling and freeboard. Since the year 1885 the scantlings of spar-deckers had been increased, and as the freeboard tables were based on Lloyd's rules of that date, the vessels with better scantlings were entitled to a greater immersion than the others were. Page 72 of the freeboard instructions contains particulars of the method whereby the calculation of extra strength is made in such cases. Shipowners and shipbuilders were now showing a marked liking for spar-deck steamers, but in most cases the scantlings adopted approximated more or less closely to those of three-deck vessels of the same dimensions, the freeboards of which were determined from their surplus buoyancy. In all such cases the assigning authorities fixed the freeboard somewhere between the 1885 spar-decker and a corresponding three-deck vessel: the immersion approaching more or less closely to that allowed by the tables for the latter vessel. Every care was taken to treat each case strictly on its merits, and he ventured to say that general confidence was felt in the decisions of Lloyd's Committee on the subject.

Mr. Hogg desired to be supplied with some formula, by the aid of which one would have only to substitute the values of all the scantlings in a steamer, and straightway the proper freeboard would be the result. He (Mr. Thearle) feared that such a formula, working like a machine, was not within the resources of science. But if the contrary were the case, then a favourable opportunity was presented to Mr. Hogg for being of service to the shipping community. Both Lloyd's and the Board of

Trade would doubtless be only too glad to get such a comprehensive and useful formula.

He (Mr. Thearle) could not but admire the industry and courage displayed in the preparation of this paper. Mr. Hogg, he should say, was a very able young man, and one from whom the Institution might reasonably hope to get some good work. He thanked him for the opportunity this paper had afforded for clearing away some mistaken ideas in connection with this subject. He held no brief from the Board of Trade to defend the freeboard rules and tables, but he felt it to be his duty to rise and point out to Mr. Hogg the mistakes he had made.

Mr. A. HOGG said he would like Mr. Thearle to show him in the Board of Trade tables where it said the percentage of reserve buoyancy was only for ships of twelve depths in length. He had gone over them carefully, looking for that, and could not find it.

Mr. THEARLE—The matter is as I have stated, but perhaps some other gentleman present who is familiar with the working of the freeboard rules and tables would like to corroborate what I have said.

Mr. HECK—It is as Mr. Thearle has stated.

The PRESIDENT—If the Board of Trade has printed tables, those tables must be taken for better or worse. If it is not so laid down in the written rules this must be taken as an expression of opinion, and you must not say, "Oh, but our practice is different." The onus lies on you (Mr. Thearle) to show where the rule or law can be found.

Mr. HOGG said he doubted when preparing this paper whether it was one of sufficient importance, as it was only a matter of a few inches draught in ordinary steamers. He was encouraged to bring it forward on noticing that there had been lately a special Load-line Committee considering the freeboard, with the result that there was now no addition, for winter North Atlantic, in steamers over 300 feet long. The tables have now been extended to steamers 600 feet long, and the depth for that vessel was given at 50 feet, he thought. The rule sheer, as a flush-deck steamer, is 70 inches, *i.e.*, extending the rules in the same proportion as they were at present; he understood from the tables they were allowed to increase this, as extra sheer, to the extent of 35 inches, and this, divided by 4, gave a reduction of freeboard of

9 inches. This steamer would have a displacement per inch of draught of about 80 tons, that multiplied by 9 inches gave 720 tons extra deadweight she was allowed to carry on the same scantlings. The freeboard tables said that vessels not classed would get the same freeboard, provided the strength amidships was equal to Lloyd's. But here they got two freeboards from Lloyd's; which is to be taken? Mr. Thearle had said so many things that he (Mr. Hogg) would rather prepare his reply for next meeting.

Mr. THEARLE—Do you wish me to give another reply?

The PRESIDENT—No; I think you have had your chance, and we cannot have this conversation carried on indefinitely.

The discussion then closed.

NOTES ON THE MANUFACTURE OF SHAFTING FOR SCREW STEAMERS, WITH SOME CAUSES OF DEFECTS AND FAILURES.

By EDWARD CATMORE CHASTON.

[Read before the Institution, in Newcastle-upon-Tyne, on Friday, March 24th, 1899.]

Without any prelude, the writer did not quite see the task he had undertaken when he promised their Secretary a paper.

There have been papers read from time to time on shafting before various institutions, and amongst others, Mr. Manuel read a paper on "Crank and other Shafts" before the International Congress of Naval Architects and Marine Engineers, held in London in July, 1897,* wherein he says that in the P. & O. Company from 1880 they had used mild steel shafting, the percentage of strength in 1881 being 24 per cent. above Board of Trade rules, and that they had gradually reduced the margin of safety of these steel shafts from 24 per cent. to 6 per cent.; he then sums up as follows:—"From an experience of sixteen years I have neither flaws nor breakages to report," etc. Mr. J. S. Elmslie in his remarks upon the paper by Mr. M. W. Aisbitt on "Certain Defects in Propeller Shafts," read before the Institute of Marine Engineers, refers to Mr. Manuel's paper, and adds:—†"If we take the leading steamship companies that have passenger trade, we shall find, taking them all round, that though there may have been a broken shaft here and there, the experience of their superintending engineers is not very different from that of Mr. Manuel's, and all these companies now have large cargo steamers." That being so, the writer is of opinion that with regard to these defects the shipowners have the matter a good deal in their own hands in conjunction with their superintending engineers.

* *Transactions of the Institution of Naval Architects*, International Congress, Number, 1897.

† See vol. 9, *Transactions of Institute of Marine Engineers.*

It is with the express intention of trying to prove that about 50 per cent. of shaft defects and failures are due to preventable causes that this paper is put before this Institution. From December, 1897, to October, 1898, the following defects have come under the writer's immediate notice, viz.: Three tail shafts condemned, one tail shaft has had a new outer liner, one length of tunnel shafting condemned, and one steamer had to have a spare one-third crank fitted. The defects which caused the condemnation of the above, in the writer's opinion, had nothing to do with bad forgings nor stress of weather, the principal cause of these failures being brought about by the shafting being out of line through the present methods of boring coupling bolt holes and the fitting of coupling bolts in the shafting on the floors in the shops instead of finally reaming the bolt holes, and fitting the bolts in the shaft when the shaft is in position in the ship afloat, which was the practice in the eighties.

Fig. 1 (Plate III.) shows the true position of a line of shafting fitted into a steamer quite recently—(the coupling over lap and centre line deviations are exaggerated to draw attention, but the figures at each coupling corrects this)—the vessel carried 6,200 tons, and indicated about 1,650 horse-power, the entire lot of couplings were bored singly through a cast iron disc (Fig. 3, Plate III.) which had steel-bushed holes, this disc had been in continual use for the previous eight years, and the disc when fitted on to the coupling (see Fig 3, Plate III.) was about $\frac{1}{16}$ inch slack, which accounts for the couplings being out as shown on Fig. 1.

The bolt holes at the fore end of thrust shaft and the after end of crank shaft were rounded as shown (Fig. 2, Plate III.), and the bolts were fitted in off the file and not direct from the lathe, as they should have been to ensure a thorough job; of course, it is admitted that it is sometimes necessary to ease a coupling bolt with a file, but there is a difference between easing a bolt and absolutely fitting it from off the file on account of the holes being a little out of truth. The bolt holes are rounded at the edge as shown in Fig. 2, so that the bolts can be driven home even if the holes are a little out. Fig. 3 (Plate III.) shows the boring disc in position, which needs no further explanation, the sixteenth slackness as previously mentioned being to facilitate the handling of the disc in the shop.

Fig. 1 (Plate IV.) relates to a vessel carrying about 6,000 tons and developing 1,400 to 1,500 I.H.P. The after stool was all loose and two stay plates were fitted as shown, and four months after this the vessel

began to give trouble with the tail shaft coupling bolts. When the vessel arrived home the two after lengths of shafting were cast adrift (see Fig. 2, Plate IV.), the couplings were reamed out and new bolts fitted, since then this vessel has made two Atlantic voyages—in ballast outward —and at present is in the Indian trade, and there has been no further trouble with her. Fig. 3 (Plate IV.) shows the plan of the stool in the case of another vessel: this stool worked loose and had to be bracketed as shown, and, as a further precaution, her tail shaft coupling was reamed and new bolts fitted.

Plate V. shows the state of centre line as found when looking for the cause of shaft defects developing. This vessel went her trial trip in June, 1897, she carries 5,700 to 5,800 tons, and indicates 1,300 to 1,400 horse-power. She ran all right for about eleven months, and at the end of that time side slackness in the after bearing developed and there was trouble to keep this bearing tight—as a matter of fact the bearing was all afloat: eventually the vessel arrived home (August, 1898), the bearing was stripped for examination, and the journal was found slack in the web of the crank shaft for more than one-third round, and the spare crank shaft had to be fitted. This vessel always ran well, and does so at the present day; the cause of this defect was clearly traced to the shaft being out of line—the sketch speaks for itself. After bedding the shaft, the thrust shaft was set into line and the holes in the after coupling of this shaft reamed out and new bolts fitted; this was done when the vessel was about fourteen months old. The reason for lining up No. 6 bearing so much vertically, as per details on sketch, was on account of the bottom of the pocket having to be dressed up.

Plate VI. refers to tapered coupling bolts as against parallel. In the writer's opinion, tapered bolts should be done away with at once; there is nothing to recommend them, as a good fit can never be guaranteed in the couplings. The bolts may be fitted good enough to pass any reasonable inspection, but there is no protection against distorting the hole in the coupling when the bolt is being driven home: this applies especially to crank shafts, where special care should be taken that the couplings are well hardened up. In addition to the risks before mentioned, many a serious breakdown has been caused by one or two bolts in a coupling having broken (as shown at bolt No. 2, Plate VI.) and the defects not being detected until the whole set had broken from the extra shearing strain coming upon them. (The writer is speaking of these defects as he had found them.) From the position of the fracture in the bolt, as

shown in sketch, it may be readily admitted, had the bolt been a good fit, the engines might have run for a few days with one or two broken bolts previous to the defect being found out, even if a serious breakdown did not occur. A fractured parallel bolt under ordinary circumstances is of rare occurrence, and when it does occur the fracture is invariably at the bottom of the thread, and is consequently detected at once. The writer cannot see anything to recommend a tapered bolt. There may be this in it, that in turning a parallel bolt there is a risk of getting it a shade slack and consequently condemned, whereas with the tapered bolt it would only mean driving it a little further in. Be that as it may, tapered bolts are an ugly feature in shaft couplings and should be done away with.

Bolt No. 1 shows wasting away at the small end, bolt No. 2 shows wasting away at the large end. These bolts are two of six which were all taken out of a crank shaft coupling. (The bolts being exhibited for inspection, further comment was considered unnecessary.) Bolt No. 3 is one of a set taken out of a crank shaft coupling (see Fig. 2, Plate VI.), and replaced by a set of bolts, as shown by bolt No. 4. So bolts Nos. 3 and 4 are only sketched for comparison. The tapered bolts had been fitted into the crank shaft coupling originally, and in less than twelve months were condemned, some having been broken and others more or less chewed up. The spare bolts were also condemned.

In June, 1897, this coupling was reamed and six new parallel bolts fitted, since which time the vessel has experienced very heavy weather in the Pacific and Atlantic, so much so that she fractured her bed-plate, sheared the 2 inches steel bolts at the foot of the after columns, and eventually had the entire bed-plate adrift; but the shaft gave no trouble whatever. The vessel arrived in the United Kingdom in December last from Wilmington. The coupling was then examined and showed signs of working; two bolts were driven out for examination, with a view to ream the holes up a little and renew all the bolts if necessary, but the condition of the two bolts was so satisfactory that the other four were not disturbed. (The bolt was shown for inspection and spoke for itself. Bolt No. 4, Plate VI.) The coupling (Fig. 2, Plate VI.) shows ample room for parallel bolts with heads to be fitted. This vessel is two years and five months old: she has had one tail shaft and one length of tunnel shaft condemned. The tunnel shaft was condemned through distortion of the bolt holes, and the tail shaft condemned through the splitting of the after liner, ripping of the outer bush, finally bending and badly damaging the tail

shaft. All this trouble took place during the first fifteen months of the vessel's career; since then the vessel has been in much heavier trades, etc., yet her troubles regarding shafting are practically *nil*, having been removed by attention to details, and to the proper fitting of parallel bolts in the place of tapered ones.

Fig. 3 (Plate VI.) speaks for itself as to the distortion of holes. It is easy to guess the result of a man driving a tapered bolt home against $\frac{7}{8}$ inch of material, as shown, with the pitch circle $\frac{1}{8}$ inch out of truth, which is too often the case. Fig. 4 (Plate VI.) shows the stern frame with outer bearing, and the writer is at a loss to know—apart from a question of cost—why this arrangement is not in more general use in the present size of tramp steamers. The writer was chief engineer of the s.s. "Zambesi," an old P. and O. liner, during the years 1889 and 1890, which had this arrangement, and there is no question as to its success. He has heard that the only drawback to this arrangement is that if a vessel strands and damages her stern frame she might also damage the shaft. In answer to that:—

A.—The "Zambesi," from 1873 to 1890, had no damage to her stern post. Since then the writer has had no record of her.

B.—With the rise of the sole piece, as shown in Fig. 4 (Plate VI.), this questionable drawback is reduced to a minimum.

C.—Even if a vessel goes ashore or strands, the position of the vessel, to cause damage to the stern post so much as to bend or damage the outer end of the shaft, would, in all probability break the propeller, and consequently strain the shaft, so that in any case the shaft would be dealt with.

The writer's opinion, based on observations from 1884 to 1892 as a chief engineer, and from 1892 to the present time as a superintendent engineer, may be summed up as follows:—

Having heard a great deal expressed lately to the effect that forgings do not undergo enough supervision at the forge, the writer would draw attention to the gauntlet of supervision and inspection the shafting has to run during its manufacture, viz.:—

1st. Lloyd's forge surveyor.

2nd. The turner who turns the shaft, and who is ever on the watch for surface flaws or defects; and the lathe itself together with the drilling machine, are of excellent assistance to expose any flaws or defects which might be latent in the rough.

3rd. Lloyd's engineer surveyor surveying the engines and shafting during construction, and the shipowner's superintendent, to say nothing

of the works' manager, who is ever on the alert to turn out good work and material.

After passing through so much supervision, it may be readily admitted that a defective forging is the exception and not the rule—that is for a defective forging to find its way into a vessel—and from the writer's own close observation since 1884 he has only found five shafts which were defective in the forging, and three of the five could scarcely come under the heading of bad forgings, when the circumstances of their cases were considered, which were as follows :—

The first and second cases were identical in both respects and in the one vessel, being Nos. 3 and 4 lengths of tunnel shafting. These shafts were 21 or 22 feet long each and 9¼ inches diameter, with one journal each.

SKETCH No. 1.

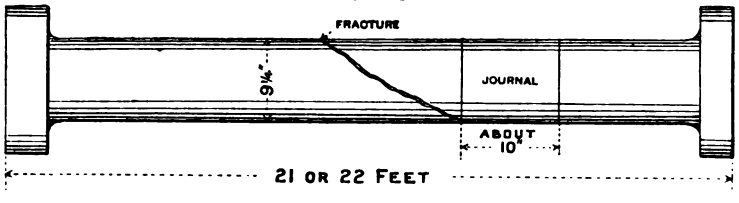

The fracture as shown in the sketch was so similar in both cases, that the one sketch will do—the shafts broke within seven weeks of each other, and although they were clean scarph breaks, it is an open question, as to whether the distance between the journals was too great or not—the writer thinks so, especially in a shaft of 9¼ inches diameter. It must be admitted that every shaft is subject to bend or deflect on account of its own weight if the distances between the stools are excessive, and in this particular case 16 feet between the journals or stools would have been better for the welfare of the shafting, and under these circumstances the writer is of opinion the forgings had not fair treatment as shafts.

Case three was a reed fracture, about 14 inches long and almost in a straight line, fore and aft. After probing ⅞ inch deep traces of fracture were still visible, and the shaft was condemned—by the way, this shaft was between seven and eight years old, and it can safely be assumed that it had reached its mileage limit of life, and consequently the fracture developed from natural causes or "fatigue of material."

Case four was a fractured journal in a solid crank shaft; so this needs no comment.

Case five was similar to case three, excepting that the shaft in this case was comparatively new, 17 feet 6 inches long by 11¼ inches diameter.

This shaft developed a fracture about 15½ inches long, and the fracture was similar to the sketch below. This was a defective forging and was condemned as such.

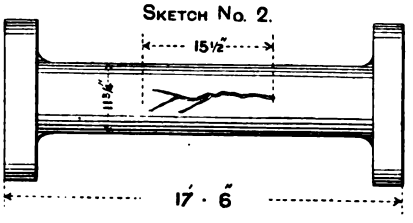

Coming now to tail shafts —the writer has seen a good few, after condemnation, broken up for critical examination, and can honestly say not more than 15 per cent. of them showed any defect in the forging, that is, taking the age into consideration, which points back to "fatigue of material." Too much is expected from a tail shaft. The writer has tried to show that, excepting the crank shaft, no other part of the shafting is in line laterally (the writer hopes it is clear that he is not dealing with the vertical centre line at all) until the tail end shaft is reached, consequently there is a certain amount of unnecessary twisting effort brought to bear upon the inner end of shaft. The after length of tunnel shafting soon frees itself, laterally, and if there is not enough freedom in the carriage, then the stool has to give, as shown in Figs. 1 and 3 (Plate IV.); after this, it is a question of the stern gland and neck ring adapting themselves to the tail shaft, which simply implies that all the bearing of any importance to the tail shaft is the after bearing of lignum-vitæ, so from thrust carriage to stern tube the shaft does pretty much as it likes. The writer has seen neck rings more than ⅛ inch out of a true circle due to the shaft freeing itself laterally.

It was not intended to deal with stern tubes in detail, as one of the members of the Institution (Mr. Richard Hirst) read an excellent paper before the Institution in 1892 on that subject, but the writer would like to point out one or two small details in vogue at the present time relating to the stern tube fittings which are very objectionable.

Firstly, there is a tendency amongst some engine builders to fit the stern gland in halves. Why this should be allowed in first-class practice is beyond the writer's comprehension. Secondly, the neck rings and after bush in too many cases are far too light in design, and the mixture of brass is not what it should be. The writer has seen neck rings $\frac{9}{32}$ inch in thickness for a shaft $13\frac{13}{16}$ inches diameter over the liner, and the outer bush

$\frac{3}{8}$ inch thickness of brass, and the lignum vitæ must have been pretty much on a par, for within six months this vessel's shaft was down $\frac{5}{8}$ inch, $\frac{1}{4}$ of which was down into the guard plate.

The importance of a good brass mixture for shaft liners cannot be too well recognised; two cases of split liners through inferior mixture of brass have come under the writer's notice: the first, as previously stated, split the liner, ripped the outer bush and broke her coupling bolts; the vessel had to be towed in, and the shaft was so badly damaged that it was condemned. The second case, a vessel twelve months old, docked for painting, immediately prior to going across the Atlantic in ballast (and properly ballasted too). While in dock the superintendent drew the shaft for his own satisfaction, and on examination found the after liner fractured, and one set pin had worked back about $\frac{1}{4}$ inch and had commenced to rip the lignum vitæ.

Sketch No. 3 showing Fracture in Liner.

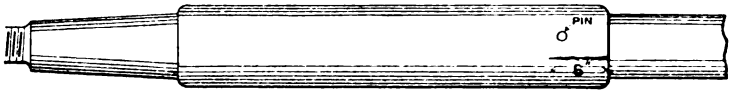

This vessel had docked in June, 1897. The shaft was drawn at that time, and found in first-class order. The shaft was drawn again in December, 1897, just on the spur of the moment, and the defective liner found as stated above. Had the shaft not been drawn, in all probability the vessel would have broken her shaft in the Atlantic, because at that time some very heavy weather was experienced.

The two final shaft defects are:—Firstly, a vessel indicating 1,500 horse-power had a new tail shaft fitted in December, 1897, and condemned in October, 1898. This shaft, which was a trifle over 20 feet in length, and weighed an approximate $4\frac{1}{2}$ tons, only gave ten months' service. This condition of things was brought about by a bad fitting propeller. The vessel, after the first shaft was fitted, made one voyage, and on her return home the chief engineer reported her propeller slack. Instead of this report having proper attention, the nut of the propeller shaft was slacked back, and the propeller hardened up; and the vessel loaded and sailed on another voyage, and finally returned to the Continent, from where another report of the propeller being slack was sent. On arrival at her coal loading port in ballast from the Continent, the propeller was taken off, and the key was found broken in three pieces (see sketch on the next page), and the driving side of the keyway in the shaft was fractured so badly that the shaft required a new end. But after considering despatch and

probable risks attached to repairing the shaft, it was decided to have a new shaft, and consequently this shaft was condemned. The propeller had never been a fit on the cone, but had been bearing hard on the top of the key for about 8 inches, as shown shaded. The hole in the boss of the propeller was damaged, and the propeller was almost condemned. Had this vessel been ten or twelve days later in coming down the English Channel to her coal loading port she would have been caught in the very bad weather which was prevailing about the third week in October, and in all probability would have added one more to the list of broken tail shafts.

Sketch No. 4.

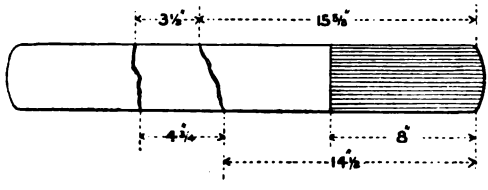

The final one is a similar case to the above, but the vessel is abroad, and the writer has no data beyond the fact of her having had a loose propeller, broken key, and keyway burst, and consequent condemnation of the shaft. From this the writer draws his own conclusions.

The question of corrosion has not been dealt with, because with care and attention this trouble can be reduced to a minimum, if engineers would only follow out Mr. Andrew's advice in his remarks on Mr. Hirst's paper as to the use of tallow and oil. The writer knows of a case where tallow and oil had been used for over four years, and the superintendent told him he could see the tool marks in the shaft the last time he examined it. The writer has an inch and a quarter cock fitted into the tube and a filling pipe carried up to the deck in the vessels under his charge, so there is no trouble to go down the after peak to put in the tallow and oil, and he is at present endeavouring to run the tail shafts in oil by a very simple arrangement, which, if successful, may be described in his reply to the discussion. As to the after end of the shaft where the propeller comes on, the writer recommends that the propellers be recessed, say, 1½ inches deep, and that the end of the liner enter the recess about ½ inch [the writer has recently seen the end of a liner forming part of the cone, which is a very good idea (see Fig. 4, Plate IV.)], then before hardening up fill the recess with fitter's red lead putty, and let the end of the liner squeeze the same out as in jointing, or use the rubber ring where circumstances will allow. With this little attention corrosion can be reduced to a minimum.

Mr. Richard Hirst in his paper says:—*"Try to induce engineers to bestow the same amount of care and attention, etc., so that the interest taken in design and workmanship may not finish at the engine room bulkhead, but be extended to the stern of the ship." The writer agrees with him, and thinks this paper clearly points out that there is not the necessary amount of care and attention given to the shafting and its details, and more especially to the value and necessity of the lateral centre line of the shafting being as true as it is possible to make it.

The writer strongly advocates going back to the practice of reaming all bolt holes and fitting the coupling bolts with the shafting in position in the vessel, so that both lateral and vertical centre lines be made as true as possible. This might add £50 or £60 more to the cost in a job of 1,500 to 1,600 I.H.P., or roughly calculating 6 lengths of shafting, 12 couplings, 72 holes, at 10s. per hole, extra, = £36—money well spent in reaming and fitting.

The distance between tunnel plummer blocks is too great in many instances, and should be more of a good fitting bearing than at present, so that every tunnel bearing does its own share of work, and the tunnel shafting should be run in oil, and not tallow, so as not to be left pretty much in the same state as a neglected grindstone, viz., as long as it goes round that is sufficient.

There was a time when brasses were fitted to tunnel bearings in tramp steamers, and as late as 1883 on the North-East Coast.

The liners on tail shafts should be a good Admiralty mixture and not of common short brass; in fact, Lloyd's should have a specified mixture for shaft liners, then split liners would be practically unheard of.

SKETCH No. 5.

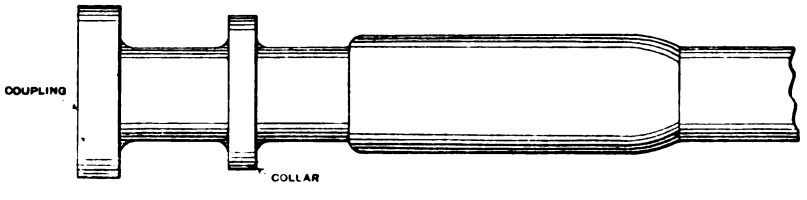

The details of stern tube fittings, neck rings, etc., should be more looked into, and the neck ring longer than at present, so that in a measure it would develop into a bearing. The stern gland should be in one piece and not in halves. Another thing should again be introduced, viz., the collar on the tail shaft.

* See page 259, vol. viii., *Transactions North-East Coast Institution of Engineers and Shipbuilders.*

The writer is under the impression that many a missing tramp has foundered with some defect taking place in the after end of the tube, such as a split liner or defective bush, sufficient to throw the shaft seriously out of line and shear or break the coupling bolts in the tail shaft coupling, allowing the shaft to run back and carry away the gland, and before anything can be done the vessel fills through the stern tube and founders, whereas with this collar and carriage a ship would be all right, as far as foundering is concerned, against filling herself through the stern tube stuffing box.

The PRESIDENT said they had had an exceedingly interesting paper, and he thought they should be doing well also to have Mr. Caws's paper on "The Failure of Propeller Shafts," so as to discuss both together.

REMARKS ON THE INCREASING FREQUENCY OF FAILURE OF PROPELLER SHAFTS.

By FRANK CAWS.

[Read before the Institution, in Newcastle-upon-Tyne, on Friday, March 24th, 1899.]

The loss of the "Westmeath" has aroused public attention to the alarming increase of frequency of accidents to the propeller shafting of steamers. Much is being said and written on the subject, and there appears to be a general consensus of opinion that something can be done, and must be done, to reduce this growing danger to life and property.

The subject is many-sided and beset with difficulties, and is one which seems to call very specially at the present time for ventilation and discussion by members of this Institution, who are more or less acquainted with its practical and theoretical bearings.

No attempt will be made in this short paper to deal in detail with the various causes assigned by different persons for the frequency of such accidents; but a few general observations will be offered for the express purpose of provoking a discussion, which it is hoped may have good practical results.

It is very likely that in the selection of the material of steamers' shafts, as well as in its forging and finishing, notwithstanding the extreme care usually exercised, still greater vigilance and more crucial tests might be applied to advantage. Or perhaps steel-drawn tubes may be adopted for shafting, in preference to iron forged shafts, with some gain of strength and fitness. Or hydraulic forged ingot steel, or Whitworth fluid compressed ingot steel, may be preferably used for tail shafts.

The employment of hollow steel shafts of enlarged diameter between bearings, and of more widely spaced and fewer bearings than usual, may be increasingly resorted to. And it is perhaps not improbable that a means of running water through hollow steel shafts without

corroding them may be found, in which case the water core would serve to keep the bearings cool, and at the same time would greatly stiffen a thin hollow shaft.

Further improvements might possibly be made also in methods for preventing the mischievous effects of corrosion and galvanic and chemical action on the outer skin of the shaft, and in the disposition of the shafting's supports and couplings, and generally in the details of their fittings throughout; for, though in these respects much has been done to attain perfection, no one will claim that perfection has been attained.

It is indisputable that the commonest cause of accidents to shafts is the ship running light with propeller partly immersed. Indeed this has been so long and so increasingly obvious that serious suggestions have been and are being put forward to obtain legal powers to enforce observance of a limitation of lightness, as strictly as the limitation of loading is now enforced. Perhaps a more practicable proposal would be, that the Board of Trade should see that the shafts of steamers designed to run light as well as laden should be made stronger than for ships designed to run at a more nearly constant displacement.

But whatever may be urged in support of superior forging and improved fittings of shafting, or in favour of limiting by law the lightness of the ship's draught, it does not seem evident, on the face of things, that there has been any recent change of practice in any one or all of these particulars, such as would account in an important degree for the remarkable recent increase in the number of accidents to propeller shafts.

And yet it seems reasonable to conclude that there must be some particular cause for this increase; for it is hard to believe so marked a prevalence of a particular form of accident within the last year or two is due entirely to exceptionally bad weather or to merely fortuitous conditions absolutely beyond the control of shipmaster, shipowner, shipbuilder, or engine builder.

Before we can adopt the conclusion that the frequency of shafting accidents in 1898 is no fault of anybody's, we should ask ourselves, has there been any marked change in naval architecture and marine engineering during recent years which may have helped to bring about this frequent failure of propeller shafts?

No sooner do we ask ourselves this question than we find confronting us the fact that during the last three years a most remarkable new development has shown itself increasingly in the British mercantile

marine. This period of three years has been distinguished by the creation of a fleet of leviathan tramps such as were never seen in this world before.

In building these monster cargo-carriers shipowners have been keen, and very properly so, to turn to remunerative account a scientific principle specially familiar to everyone possessing even the most elementary knowledge of ship-model experiments. The principle is simply this: that for comparison of performance of ships of the same underwater shape, but of different sizes, corresponding speeds are proportional to the square root of linear dimensions, and corresponding powers are proportional to the displacement multiplied by the corresponding speed in each case. So that if the linear dimensions of one ship were n times those of another ship of the same underwater shape, the corresponding speed of the larger will be $\sqrt{n}$ times that of the smaller ship, and the corresponding power of the larger will be $n^3 \times \sqrt{n}$ times that of the smaller ship.

Thus a ship of say 225 feet long, at a speed of say 10 knots, and a power = P, corresponds with a ship of the same underwater shape of say 450 feet long, at a speed of 14 knots, and a power = 11·2 P. Now, to drive the larger ship at the same 10-knot speed as the smaller ship will take a power of only say 3·7 P. So that the larger ship with 8 times the displacement can go at the same 10-knot speed with only 3·7 times the power of the smaller ship, thus the cost of power per mile-ton of the larger ship is only $\frac{3 \cdot 7}{8}$, *i.e.*, less than half, that of the smaller ship at equal speed.

Not only as regards power and consumption, but also as regards working expenses in many other ways, and also as regards first cost per ton deadweight, the principle of bigness proves its advantages.

Several firms of shipowners, a few years ago, realising the commercial value of this principle, gave practical effect to it by building ships of the "Westmeath" class, which could be sailed at a profit when smaller ships were barely paying their way. And hence, throughout the last three or four years, ships of the leviathan tramp order have been coming more and more to the front, ships of enormous carrying capacity, and with very economical engine-power. These ships have been engined to drive somewhat faster than the common tramp, but not so much faster as what would be the corresponding speed due to their great size; and so, while they have gained part of the advantage of their bigness by increase of speed, they have at the same time gained very considerably in economy of power and consumption.

Now it has become notorious that the casualties to ships through the breaking of their shafts are a much higher percentage of the comparatively small number of these leviathans than of other ships. In this fact the writer suggests some clue may be found as to the cause of the failures complained of.

Doubtless there are very many conditions and things combining to determine the strength and endurance of a propeller shaft; indeed the subject, both on its practical and theoretical side, is almost inexhaustible. But, whatever other factors may govern, it is quite certain that, other things being equal, the strength depends to a very large extent on the diameter, and varies as some power of the diameter. When we come to ask, what power of the diameter? we are brought to consider the various kinds of stress to which a propeller shaft is subjected. Whether we regard it as resisting bending or as resisting torsion, in both cases alike, its primal strength varies as the cube of the diameter. But stiffness, as affecting endurance, is a ruling quality to be considered as well as primal strength. Practically, in the case of very extended lengths of shafting, stiffness may in its effects be more important than the primal torsional strength. Referring to land engines it may be said that a marked degree of flexibility in the shaft tends to irregular and erratic changes of stress, so that in land machinery stiffness of shafting is an acknowledged desideratum. But a steel ship of great length is endowed with a considerable degree of flexibility, and if the shafting be not equally flexible a quarrelling of stresses must go on to the detriment of both the shaft and ship. It would therefore seem probable that what is wanted with a ship's shafting is not the maximum of stiffness so much as the maximum of harmony between the flexibility of the ship and her shaft.

Be that as it may, it is noteworthy that even with ordinary shafting of land engines the length of the shaft has a very effective influence on its real ultimate strength: for a shaft which, if short, might be quite strong enough to do the work required of it, might, for lack of stiffness, fail, if of great length.

It will be thus seen that the problem of how to determine the diameter of the shaft of a large steamer of the leviathan class is no easy matter, especially when it is recognised that we do not know how much or how little weight to attach to the question of stiffness of shaft as compared with primal strength. And this uncertainty may well influence our verdict as to what power of the diameter should be employed; for the stiffness of a shaft does not follow the same power as its primal strength,

that is to say, the stiffness varies not as the cube, but as the fourth power of the shaft's diameter divided by its length.

One of the difficulties referred to at the opening of this paper is this difficulty of assessing the amount of play to be given to the principle of primal strength on the one hand, and of elasticity and flexibility on the other.

In the realisation of these difficulties we turn to the formulæ of the Board of Trade and Lloyd's, and the first thing we note is that by that authority the cube of diameter is adopted as the ruling power of the shaft's endurance, the question of stiffness being thus treated as though it were of no moment, or as though stiffness varied as the cube of diameter.

Now, if the ship were always running with propeller well immersed the question of stiffness might safely be neglected, for two reasons: 1st, because the ship herself, having her stern waterborne, would not change her shape so much as when running light and, like a cork on the surface, rolling, and pitching and scending greatly in a sea-way, and undergoing violent alternations of compression and tension; and, 2nd, because the propeller itself when sufficiently immersed does not thrash the surface of the sea and subject itself and its shaft to the very damaging impactively irregular stresses which such thrashing occasions.

Doubtless if, without encountering mechanical objections which seem insuperable, ship's propellers could be easily adjusted to work always wholly immersed without reference to the ship's draught, considerable advantage would result not only by avoiding impact of the sea, so damaging to the propeller and shaft, but also by securing a higher and more constant efficiency of propulsive thrust It is, however, to be feared that the practical difficulties besetting any plan for rendering the draught of propeller adjustable at pleasure will continue to prove in the future, as they have proved in the past, so great as to forbid such an improvement ever being commonly adopted.

While the greater length of shaft of a leviathan, as compared with that of an ordinary tramp, may, by its influence on the stiffness, contribute in some incalculable degree to the greater frequency of shaft failures in these leviathans than in ordinary steamers of the merchant class, there is in these mammoths surely some more palpably predisposing cause of shaft weakness.

Now, the rules for determining the diameters of shafting adopted by Lloyd's and the Board of Trade make the strength of the shaft depend entirely on dimensions which govern the power of the engines; and no separate account is taken in these rules of the power of the ship.

When the ship is steaming ahead in smooth water with propeller well immersed the power of the ship as developed in her resistance is the counterpart of the power of the engines as developed in their effective thrust on the shaft. So in that case, if the shaft has been proportioned of adequate diameter to withstand the thrust of the engines, it is likewise proportioned to withstand the resistance of the ship.

But when a ship is tossed up and down and set rolling by the waves a vertical power is developed by her mass, a power which the propeller has not to be held accountable for, as the propeller did not cause these waves. And yet by this additional power the propeller is driven downwards or pulled upwards through the water besides being driven by the steam power. In some phases of the wave action this extra power will act on the propeller as a plus, and in other alternate phases as a minus stress, and thus the shafting will be subjected to more or less violent irregularities such as are known to be most prejudicial to the life of any material thus harassed and distressed. Now, this extra power of the rolling and pitching and scending ship in no substantial degree depends on the steam power driving the propeller, but is measured and determined by the inertia of the ship's displacement mass; and it is easy to understand that the enormous weight of a leviathan tramp thus proves too cruel to her comparatively small propeller shaft when it comes to a case of thrashing a stormy sea.

Probably if, in disregard of commercial economy, these big ships were driven at higher speeds corresponding to their bigness, and were thus furnished, as they then would be, with shafting of greater diameter agreeing with the greater driving power, according to the rules of Lloyd's and the Board of Trade, accidents to their shafting would occur not with more but with less frequency than in the case of smaller vessels; because the longer ship will prove the steadier in a sea-way. But this advantage of additional sea steadiness seems in existing circumstances to be practically more than neutralised by the smallness of diameter of their propeller shafts, which, though proportioned to their comparatively small power of engines according to Lloyd's rule, are not also proportioned, as they ought to be, to their huge displacement.

The writer therefore suggests that Lloyd's rule for the diameter of a steamer's shaft should be modified by implicating a coefficient expressing the power of the ship's displacement at her light draught.

Of course any addition to the diameter of shafting must be attended by increase of cost, and also, though not quite inevitably, by increase of friction.

So long as Lloyd's rule remains as it is, shipbuilders and engine-builders, who have already in recent practice increased their shaft diameters for these large steamers beyond the requirements of that rule, will have to bear voluntarily the additional expense, and doubtless they will do so rather than run the risks which working by Lloyd's minimum entails in the cases of these monster ships. But it is undesirable in the interests of life and property that, in default of Lloyd's rule, the safe proportionment of shaft diameters should be left, even temporarily, to the discretion of shipbuilders and enginebuilders; and it is therefore to be hoped that an improvement in Lloyd's rule, which recent unhappy experiences have proved to be necessary, will be made at an early date.

DISCUSSION.

Mr. W. Mace, in opening the discussion, said Mr. Chaston spoke about an outer bearing. He was quite right, and he (Mr. Mace) was at a loss to know why the outer bearing had been dispensed with. Some said it was an old-fashioned idea. It might be so; but history repeated itself in many facts of the present day, even in science and art, and they might in time revert back to the old idea, by having an outer bearing properly fitted with a lignum vitæ or brass-fitted bearing in a true line with the engine shaft and tunnel. The shaft would work more steadily, and the strain covered by the weight of the propeller would be equally divided between the stern and outer bearing. Respecting the stools in the tunnel, more should be fitted, especially in shafts of great length. The shafting should never be fitted with coupling bolts in the shop, as Mr. Chaston said; they should be fitted when the ship was afloat. The stern gland should be fitted in one piece, and the neck bush should be made heavier, and the mixture of brass carefully examined. The filling of the stern tube with oil, tallow, and other lubricants, and the fitting of a filling tube and cock in every ship would thus prevent corrosion. He was at sea in a steamer some years ago, and there was a filling tube fitted through the after peak into the stern tube with a cock. As soon as the cargo was out the melted tallow and oil was poured down the pipe and good results were obtained. The steamer was an iron one, and drew more water than the steel ships of the present day; as when the present cargo boat of to-day was discharged she generally had half of her propeller boss out of the water, and by this means there would be no danger arising from filling the stern tube with oil, if the pipe was properly fitted. He quite remembered when brasses were fitted to

tunnel bearings some years ago, and it was a pity they were discontinued. The stern gland should be in one piece, and not in halves, and there should be a collar on the tail shafting fitting. He must say Mr. Chaston's paper deserved great praise, as it was a thoroughly practical paper, and full of interest to those connected with this Institution.

The paper by Mr. Caws was a very interesting one, and would be the means, as he stated, of covering a most useful discussion amongst the members of the Institution. As regarded what he said respecting the selection of materials, forging, finishing of the shaft, etc., there was one strong point to be borne in mind, and that was that a shaft might be forged, finished in the lathe, and examined in the most scientific manner by an expert, who would be an authority as a forgeman or engineer, and yet not find a single detriment on the outside. But what about the inside? The shaft might be compared to an apple or pear—perfect on the outside. But cut it through, and what might be found in the core was a very difficult matter to answer. If the maker, like the doctor, could put on the Röntgen rays to see if the shaft was perfect, and so find out the defects, that might help the difficulty. He was confident that then only a manufacturer could say to a customer, "I sell you that shaft, and guarantee it perfect in all ways." Mr. Caws said that some clue might be found as to the cause of the failure. How was that clue to be obtained? He was afraid it was a very difficult one to obtain. As regarded the shafts in land engines, they must bear in mind there was no racing on those engines; they worked steadily all the time; no sunken wreckages for propellers to strike; only a sudden breakdown of the land engine might cause an accident. Respecting the adjusting of the propeller: to adjust them so as to be wholly immersed was tried some years ago by Messrs. Harland & Wolff, Belfast, in the White Star Line R.M.S.S. "Britannic," and after a very fair trial was dispensed with. Mr. Caws said: "Probably if big ships were driven at higher speeds, corresponding to their bigness, and were thus furnished, as they then would be, with shafting of greater diameter, agreeing with the greater driving power, according to the rules of Lloyd's and the Board of Trade, accidents to their shafting would occur not with more but with less frequency than in the case of smaller vessels; because the longer ship will prove the steadier in a seaway"; but they must bear in mind more power would have to be put into the ship, and in a cargo ship this would mean more engine and boiler space, and more consumption of coal, and it would not be an economical ship from an owner's point of view. Now, as regarded

Lloyd's and Board of Trade, he was sure they would agree with him—and especially if any of the surveyors of those societies were present—that the surveyors of those societies were studying the question very closely, and that they would be too pleased to meet any person who could offer to them any suggestion about the much-vexed question of broken shafts.

Mr. J. M. RENNOLDSON (Vice-President) said he had read both these papers, and there were certain things which he thought very commendable in the suggestions made, and particularly in the system of lubricating propeller shafts. He had had a good deal of experience in fitting shafts to be run in oil. He could go back twelve years, when they fitted the first vessel under those conditions. It happened to be sold when the first survey was due. The shaft was drawn in their own slipway. The result was that every tool mark in the shaft was visible, not the simplest sign of corrosion, and the shaft was as good as when put in. They had had other vessels built for the same owners, with the same result. That, of course, obviated entirely the difficulty which arose from corrosion at the end of the liners; but he held that it would be profitable and advisable if the liners were altogether dispensed with. They had fitted a number for vessels working in sandy waters without liners, simply with hard cast iron bushes at the outer end and an ordinary brass or cast iron neck ring with brass bushed gland at the other. In some cases where infinite trouble was experienced by the wearing down of the shaft, that had been entirely avoided by using the lubricant; oil was pretty cheap, and no one needed to grudge the expense. If that system was adopted in the mercantile marine, the corrosion from liners would be altogether dispensed with, and a considerable saving in first cost effected, which was always looked upon with favour by owners, the question being who would produce the cheapest ship and engines. Perhaps one of the causes of the failure in ships in recent years was the attempt to cut down everything to a minimum. The life of shafts properly designed would be very greatly lengthened, as wherever a liner was put on a shaft it was hidden from view. It might appear all right at the end, but there might be corrosion going on underneath the liner, which no one could ascertain until it was removed. With regard to lining the shafts throughout the whole length of the tube, which was becoming the custom, he did not approve of that, as however much care might be taken in joining the ends of the liners, there was always a danger of their not being water-tight; and where excessive straining and torsion was brought to bear upon the shaft, as one of those huge shafts in rough Atlantic weather was liable to, the

joint of these liners was sure sooner or later to give out and water find its way underneath, and where a shaft was covered from end to end there might be serious corrosion entirely hidden from view. He had a strong feeling that if these liners were abolished altogether, and shafts made to run with oil lubricants, that a very great saving in the life of shafts and cost to shipowners would result. They found from practice that the cost of lubrication and amount of oil used was not great, because there was practically no necessity to have any waste. The stern gland could be kept almost perfectly tight, allowing just freedom for the oil to work slowly through, and the pressure due to the head of oil in pipe stopped the access of water. The method of lubricating the shafts was well carried out by the deck pipe; in many cases lubricators of the Mullerup type were fitted in the engine room worked by the engines, with a pipe led to the stern tube, but this system while more economical would be almost impossible with shafts of great length having a long tunnel. Still, with care, and having regular lubrication from the deck, the system could be carried out perfectly well. With regard to the breaking of shafts generally, his experience was that in small vessels the breaking of shafts was practically infrequent. They had had very few actually fractured tail shafts, and they had either gone from corrosion, loose propellers, or damaged keyways. He thought that went to prove that where the shafts were worked to Lloyd's and Board of Trade rules, breakage principally occurred in larger ships which exposed their propeller more in bad weather; and that led them to the conclusion that it was the larger class of vessel and heavier shafts that required the attention of the registry association with a view to having these shafts strengthened. He thought the papers excellent in character, opening up a field for wide and profitable discussion. The accidents which had occurred recently to shafts, he thought, made it a necessity that engineers generally should take up this matter and have it thoroughly thrashed out. It was very gratifying to know that Lloyd's was making enquiries into this very subject, and he had no doubt that proper and wise measures would be adopted, which, as far as possible, would obviate the difficulties which had arisen.

Mr. David Andrew said he had listened with pleasure to Mr. Chaston's paper, as the subject of shafts was one he had taken great interest in for many years. In regard to Mr. Chaston's remark that about 50 per cent. of the shaft defects and failures were due to preventable causes, he (Mr. Andrew) thought he put it very mildly, and would himself be inclined to put it at a minimum of 75 per cent.

Turning to Mr. Chaston's remarks on the "gauntlet of supervision" through which a shaft passed, he (Mr. Andrew) was inclined to think that in very many cases the supervision ended with the trial trip. If the same supervision was carried on during the time the shaft was running as was done during the time of manufacture there would be less damaged shafting. In reference to Mr. Chaston's remarks with regard to the vessel mentioned which went on a trial trip in 1897 and ran all right for about eleven months, after which there was trouble with the bearings and, eventually, when the vessel arrived home, trouble was found in the slackness of the web of the crank shaft. The vessel always ran well. The defect was traced to the shaft being out of line. He (Mr. Andrew) thought this a very bad state of affairs for a vessel fourteen months' old, but he did not think it was due to unfair couplings as Mr. Chaston inferred; it pointed to bad workmanship or a want of supervision on the part of someone in allowing the shaft to get out of line which, in his opinion, was the key to the situation. Many similar cases of the shaft getting out of line had come under his own notice; but, he must say, very rarely in such a short space of time unless there had been severe heating of the bearings. In several cases he had found, when a fractured crank-shaft or loose journal was removed it left the bottom brasses broken, sometimes in three parts, and the brasses would have from $\frac{1}{8}$ to $\frac{3}{16}$ inch side play in the seats; the injury to the shaft would be attributed to thrashing across to the westward in ballast, badly built shafts, or defective material, but not to the want of supervision in allowing the shaft to get out of line; but the case quoted by Mr. Chaston clearly pointed in that direction. He had also observed another source of danger to crank shafts, viz., the habit some engineers afloat had of cutting down the sides of their main bearings in order to give clearness at the side, reducing the bearing less than one-half. Many, he must say, did not stick to the minimum in the amount of clearance, with the result that the shaft got out of line sooner and allowed it to have a wobbling motion in the bearings, and the next time the bearings were lifted the engineer found the shaft had been bearing upon the sides which gave a little more clearance, and eventually a fracture, loose pins, or journals. Mr. Chaston's remarks with regard to coupling bolts might be right to some extent; but he had always found that the trouble with coupling bolts in the tunnel or intermediate shafting was due in a great measure to the shafting being allowed, as he said, to get out of line. It had come under his own notice that it was not an unusual thing to find a tunnel-bearing from a $\frac{1}{4}$ to $\frac{1}{2}$ inch out of line. It was straining the point too much to attribute the trouble with coupling bolts to the couplings

being unfair to the extent of $\frac{1}{32}$ to $\frac{1}{64}$ inch, when in many cases the tunnel-bearings were run $\frac{1}{4}$ inch slack and out of line. He quite agreed with Mr. Chaston that the bearings in the tunnel shafting were too far apart, more particularly with a small shaft, which allowed a spring on the shaft. He must say it would be a great advantage, and they would hear less of bad forgings, bad workmanship, and results of heavy weather if the tunnel-bearings had a great deal more attention than they had in the ordinary ocean tramp. He recollected the time when the outer bearings on the rudder post was a general fitting; but the drawback at the time was undoubtedly the faults of construction, when the stern frame was made with two light posts, placed wide apart with a light sole piece between, the idea being then to give the propeller plenty of play. The result was in many cases when the ship stranded it bent the post and jammed the outer bearing. That was one reason for it being at that time dispensed with; but the present form of stern frame, shown on one of the plans in the paper, was of a form that would admit of a return again to that useful bearing, the outside one, and if adopted they would have fewer cases of broken propeller shafts; for undoubtedly at the present day, with such large ships and enormous weight of propeller hanging on to the end of the shaft, it must shorten the life of the shaft. Great interest had been taken by kindred institutions in the question of propeller shafts, and he was correct in saying that this interest dated from Mr. Hirst's able paper on the subject, and had resulted in a tendency to increase the size, which would undoubtedly lengthen the life, but not to the extent expected unless protected from the action of sea water. Mr. Chaston, describing a fracture in a shaft, assumed that it had reached its "mileage of life," and consequently the fracture resulted from "natural causes." This, to his (Mr. Andrew's) mind, raised a question which had received little or no attention, viz., is there a mileage limit for a well-cared-for shaft, or should it be allowed to run until it developed a fracture or something worse? He would like to have gone further into this matter; but had merely, on the spur of the moment, got up to speak on the subject. One thing he should like to draw attention to: Lloyd's rules, with regard to the drawing of the propeller shaft every two years. He (Mr. Andrew) thought it would be a great advantage if Lloyd's made it imperative that propeller shafts should be drawn once a year, and also that Lloyd's should insist upon the lining up of the crank and intermediate shafts as well as the propeller shafts when drawn. He thought if that were done and attended to they would hear less of broken shafts than they had done.

The discussion was adjourned and the meeting dissolved.

NORTH-EAST COAST INSTITUTION OF ENGINEERS AND SHIPBUILDERS.

FIFTEENTH SESSION, 1898-99.

PROCEEDINGS.

SEVENTH GENERAL MEETING OF THE SESSION, HELD IN THE LECTURE HALL OF THE SUNDERLAND LITERARY SOCIETY, SUNDERLAND, ON FRIDAY EVENING, APRIL 21ST, 1899.

SIR BENJAMIN CHAPMAN BROWNE, D.C.L., J.P., PRESIDENT.

The SECRETARY read the minutes of the last General Meeting, held in Newcastle, on 24th March, 1899, which were approved by the members present, and signed by the President.

The ballot for new members having been taken, the President appointed Messrs. R. H. Muir and C. H. Reynolds to examine the voting papers, and the following gentlemen were declared elected :—

MEMBERS.

Arentz, H. S., Engineer, c/o Messrs. R. & W. Hawthorn, Leslie, & Co., St. Peter's, Newcastle-upon-Tyne.

Eason, Thos., Marine Engineer, 22, Whitby Street, North Shields.

Farquharson, Geo. James, Engineer, c/o Messrs. Elder, Dempster, & Co., Linsenhof, Hamburg.

Leathard, Thomas Surtees, Surveyor, 9, Otto Terrace, Sunderland.

Tweedy, John, Engineer, 22, Lawson Street, North Shields.

Toyne, G. A. Dryden, Surveyor, Lloyd's Register of Shipping, 3, St. Nicholas' Buildings, Newcastle-upon-Tyne.

ASSOCIATE.

Pybus, Jun., William M., Solicitor, 85, Osborne Road, Newcastle-upon-Tyne.

VISIT OF THE INSTITUTE OF NAVAL ARCHITECTS.

The PRESIDENT said that the minutes of their last meeting recorded that the date was "not yet fixed" for the visit of the Institution of Naval Architects to Newcastle-upon-Tyne. The date had now been settled, viz. :—Tuesday, 18th July, and the three following days, Wednesday, Thursday, and Friday. They would be welcomed by the Mayor of Newcastle.

NOMINATIONS FOR THE COUNCIL.

The PRESIDENT intimated that, in accordance with Article X. of the Constitution, the following gentlemen retired from the Council :—President—Sir B. C. Browne (eligible for re-election) ; Vice-Presidents —Messrs. E. W. De Rusett, W. H. Dugdale, and H. Fownes (eligible for re-election) ; Hon. Treasurer—Mr. G. E. Macarthy (eligible for re-election) ; Ordinary Members of Council—Messrs. R. P. Doxford, Summers Hunter, M. C. James, W. G. Spence, and R. Wallis (not eligible for re-election).

The PRESIDENT, in accordance with Bye-law 11, on behalf of the Council, nominated the following gentlemen to be balloted for to fill the vacancies :—President—Sir Benjamin C. Browne, D.C.L., J.P. ; Vice-Presidents (three to be elected)—Messrs. E. W. De Rusett, W. H. Dugdale, Henry Fownes, and Summers Hunter ; Hon. Treasurer—Mr. G. E. Macarthy ; Ordinary Members of Council (five to be elected)—Messrs. W. C. Borrowman, E. H. Craggs, Alfred Harrison, Andrew Laing, David Myles, and C. H. Reynolds.

The PRESIDENT said his nomination was practically re-election for another year. He was exceedingly obliged, and would do the best he could for the good of the Institution.

Mr. ARCHIBALD HOGG replied to the discussion on his paper on "Some Considerations on Freeboard and on the Relation between Scantlings and Freeboard."

The discussion on Mr. E. C. Chaston's paper on "Notes on the Manufacture of Shafting for Screw Steamers, with some Causes of Defects and Failures," and Mr F. Caws's paper on "Remarks on the Increasing Frequency of Failure of Propeller Shafts," was resumed and adjourned.

MR. A. HOGG'S REPLY TO THE DISCUSSION ON HIS PAPER ON "SOME CONSIDERATIONS ON FREEBOARD AND ON THE RELATION BETWEEN SCANTLINGS AND FREEBOARD."

Mr. A. HOGG said that at the last meeting in Newcastle Mr. Thearle criticised this paper, and said he would point out wherein the errors consisted, but had not time to show all the errors. The writer was very pleased to get Mr. Thearle's extensive remarks. On looking over these, however, he failed to see that Mr. Thearle had shown any of the errors he spoke of, except it was that of the percentage of reserve buoyancy, which Mr. Thearle said applied only to vessels of 12 depths in length, and which the writer would show did not affect the question to any extent. All the parts referred to by Mr. Thearle would be taken up in this reply.

It was only after a very careful study of the freeboard explanations that the writer decided that the reading of those meant that the percentage of reserve buoyancy given above each depth in the tables applied to all vessels of that depth, irrespective of length; and not only of length, but also of sheer, round of beam, and tumble home of side of ship. From the instructions to surveyors, tables of freeboard, they read that:—

1st. The tables involve the reservation above water of a regulated minimum percentage of the total buoyancy.

2nd. The exact freeboard for a given ship may be calculated.

3rd. The percentage of the total volume which is given in the tables as the reserve buoyancy for a vessel of given type and dimensions will be the amount of volume that must be left out of the water.

4th. The moulded depth is used in the tables for ascertaining the amount of reserve buoyancy.

5th. The drawing used in such calculation should be verified by actual measurement at the ship, and such drawing and calculations forwarded to the Board of Trade.

(Thus the drawing is that of the ship as she is.) These were extracts from the explanations where reference was made to the percentage of reserve buoyancy. There was no mention of modifications on account of length or sheer, or round of beam. They further read in the explanations that "The tables as now submitted involve only such

limited modifications of the freeboard assigned by the latest tables of Lloyd's Register as Mr. Benjamin Martell is able to freely accept and cordially concur with. The same may be said of the extension of the 'tabular' forms by the addition thereto of corrections for changes of length." Now, the "tabular" forms were those used in the approximate freeboard tables, and are of vessels 12 depths in length, with any coefficient of fineness varying from ·68 to ·82, and having standard sheer and round of beam (the beam might be anything provided the stability was right). The explanations said, "In applying such an approximate method as the above (*i.e.*, the graduated freeboard tables) it is necessary to connect the coefficients of fineness, given in the tables, with a standard sheer and round of beam." These tables were aiming at the percentage of reserve buoyancy, hence the above necessity (and subsequent corrections) and the above correction for length, which were unnecessary when the reserve buoyancy was calculated, as this took account of all extremes of these parts. If that was not the meaning of the rules, they should be made more explicit. It was rather strange that the basis of freeboard should be the reservation above water of a regulated minimum percentage of buoyancy and that no example be given, especially when there were corrections for length, and presumably corrections for sheer and round of beam. In saying freeboard was the measurement of the height of deck above water, not the volume of the ship above water, the writer was only quoting from the freeboard explanations. They would find it so if they looked at the sixth line on page 5 and the first line on page 7,* and it was again borne out by the fact that the freeboard, for all vessels having lower coefficients than ·68, is a constant measurement, the percentage of reserve buoyancy not applying to these cases. The height of the deck above water at amidships was no exact measure of the volume above, because one ship's side may lie outwards, especially fore and aft of midship, and another tumble home; one might easily have a very full bow and stern, and another quite the reverse. Steamers are built with these differences.

The writer said the scantlings should be made to suit the draught and form below water-line; the following cases would, perhaps, illustrate why:—The freeboard for steamers is always ascertained from the graduated tables, with all the corrections for length, sheer, and round of beam, so that they had a very considerable range of draughts for the same depth at amidships, and consequently the same scantlings. Take a steamer 600 feet long, 74 feet beam, and 50 feet depth at amidships, and

* See "Freeboard Tables."

coefficient ·8. The winter freeboard for this, taken from the tables, is 14 feet 10 inches. To get this she must have 70 inches mean sheer and, say, 18 inches round of beam. Now, if the round of beam were, say, 14 inches, and sheer 42 inches, the freeboard would be 15 feet 7 inches, also if the round of beam were 22 inches, and sheer 98 inches, the freeboard would be 14 feet 1 inch, *i.e.*, a range of 18 inches, or equivalent to, say, 1,600 tons deadweight. The depth of these vessels at amidships remaining constant causes the scantling numerals to be the same in both these extremes. A spar-deck steamer gets lighter scantlings than a three-decker, because her height of deck amidships, above water, is greater; but she can still be about the same height at the ends of the ship as the three-decker. Now, if they called this spar-decker a three-decker, and reduced the sheer a little below the rule, she would not get any more draught, although she is about 18 inches deeper amidships, and has heavier scantlings than the shallow three-decker, just the reverse from the principle of the spar-decker's scantlings. A flush-deck steamer of, say, 24 feet depth, gets a certain draught. If they increased the sheer, and add a forecastle and long poop (which need not extend over amidships), they could reduce the vessel's depth at amidships so considerably as to make the framing and plating scantlings lighter all round, while the writer would rather think these scantlings should be increased. It is such cases as these which make it difficult to understand the freeboard explanation regarding the stress per square inch of material "amidships." These are extreme cases. The writer thought these inconsistencies might easily be avoided by taking the form of the vessel below water more into account. It might be stated that there were no freeboard tables for spar-deckers, as they were now built by Lloyd's. They could not tell what freeboard would be given to a proposed spar-decker.

Mr. Thearle was mistaken in thinking that the writer said the Board of Trade freeboard takes no account of "buoyancy" (if that is what Mr. Thearle meant by "form"). The writer said, in other words, that the one freeboard opposite the coefficient ·68 was given to vessels both fine and full-ended, and this was true. The question of reserve buoyancy which Mr. Thearle pointed out, and which, as had been shown, was due to the vagueness of the rules, was only a corner of the question, and did not affect the inaccuracy of the graduated freeboard tables, which could still give 4 inches wrong draught in vessels of 12 depths in length, and having all the rule conditions of sheer and round of beam, and could still be wrong to the same extent in vessels of extreme proportions. Besides,

it should be noted that, according to the freeboard rules, this percentage of reserve buoyancy only held good as long as the freeboard was greater than that given in the tables opposite the coefficient ·68, so that the freeboard really was practically fixed at a constant figure for vessels of extra broad beams. The writer suggested in his paper:—1st. That this constant freeboard, or some such, should hold good for all ordinary flush-deck vessels, which, being of less beam, would be more seaworthy; the lifting power would be about as near that of the principle of the Board of Trade freeboard as is the present approximate tables. The approximate tables are aiming at a certain volume of reserve buoyancy which is not obtained exactly (and this is acknowledged by the freeeboard explanation), so that evidently a few inches does not matter. 2nd. That the scantlings should be regulated by numerals, taking more into account the form of the vessel below the water, so as to avoid the inconsistencies, such as have been shown; the result of these, it is hoped, would be to simplify the freeboard rules. It should also be noted that Mr. Thearle admitted that the freeboard tables were imperfect.

To the student studying the freeboard tables the following points referring to the calculation of freeboard on the percentage of reserve buoyancy basis require explanation, viz.:—

No. 1.—Has the percentage of reserve buoyancy given in the A tables to be calculated for all vessels of any length, any sheer, and any round of beam?

No. 2.—If so, has the resultant draught to be corrected for length?

No. 3.—Has the draught to be again corrected for sheer and round of beam?

No. 4.—Does the percentage of reserve buoyancy given in the C tables apply to all vessels of any sheer and round of beam?

No. 5.—Has this draught also to be corrected for length?

No. 6.—Has it again to be corrected for sheer and round of beam?

Perhaps Mr. Thearle would kindly give them the correct interpretation of the rules regarding these points, as they were not all clear.

The PRESIDENT—That, of course, finishes the subject of Mr. Hogg's paper. It was a very interesting paper and they had had a very good discussion on it. It would be their pleasure to pass to Mr. Hogg a very hearty vote of thanks. He had much pleasure in conveying to Mr. Hogg the hearty thanks of the Institution.

The vote was carried by acclamation.

DISCUSSION ON MR. E. C. CHASTON'S PAPER ON "NOTES ON THE MANUFACTURE OF SHAFTING FOR SCREW STEAMERS, WITH SOME CAUSES OF DEFECTS AND FAILURES," AND MR. F. CAWS'S PAPER ON "REMARKS ON THE INCREASING FREQUENCY OF FAILURE OF PROPELLER SHAFTS."

The PRESIDENT said they had had the beginning of a very interesting discussion in Newcastle on these papers, and what struck him personally was, he did not think any of the speakers raised the question that they were going through a course of bad forgings. All seemed to imply that these were due to some other causes than bad forgings. Indeed, no forgemaster in the room might think there was any imputation on his character or work.

Mr. J. T. MILTON (chief engineer surveyor, Lloyd's Register) said before beginning to make any remarks on the papers, he wished to express the great pleasure it was to him to be on the North-East Coast at one of these meetings again, especially presided over by the chairman of the company he had the honour of serving so long. He hoped they would excuse him, if, perhaps, he wandered a little off the subject of the two papers into the subject of shafting generally; although he would try not to do it, he was afraid that the fact of his having had so much to do with shafts in general might tempt him to go off the question of the papers. The first he would have to remark upon was Mr. Chaston's paper. They must be obliged to Mr. Chaston for his very practical paper on the question of workmanship and design in shafts; but he was sorry to disagree with several of his opinions. Mr. Chaston raised some points about coupling bolts. He evidently preferred parallel bolts to tapered bolts. So did he (Mr. Milton); but he would be sorry to say they could not make a good job with tapered bolts. Each had their advantages and disadvantages. When they had parallel bolts they had a good deal of risk in getting them a proper fit. A parallel coupling bolt to be a proper job must be a good driving fit; that was to say, the bolt must be a little larger than the hole it had got to be driven into, a very little larger, and if in the turning they took the least shade off, the bolt was spoiled. He was reminded of a discussion with the late Sir Joseph Whitworth, who introduced a system of standard gauges.

He was the first engineer to insist upon accuracy of gauges in bolts and such like details; but after he had supplied sets of standard male and female gauges to all the engineering establishments in the country, he discovered they were all comparatively useless They wanted for each standard two extra sets of what he called difference gauges. Take, for instance, the making of a pin to be exactly 1 inch in diameter. All the time it was the least shade over an inch it would not go into the female gauge, but there was no knowledge of how much it was too large, but the moment it did go into the gauge it was smaller than 1 inch and was probably spoiled. With difference gauges of two or three millionths above and others two or three millionths below the standard gauges, they would be able to obtain a standard of perfection of fit, and in fitting coupling bolts a similar degree of accuracy of turning was required. It was difficult to make them absolutely right. He believed, in gun work, as the President would know, where interchangeable work was required, the practice was to have two different gauges, and pieces of machinery which had to be interchangeable, would have to go into one and not into the other. Parallel bolts, then, were difficult to fit without risk of loosening them. Tapered bolts, however, were easy to make and fit, but the one great defect was they could never draw the couplings together with tapered bolts, if not quite close at starting they could never get them close. The bolts have to fit tightly into each coupling. Then, suppose they had a thorough good job made with tapered bolts and they got a coupling absolutely close, and for some reason or other the shafting got slightly out of line, so that the coupling strained the bolts a little, and, suppose the straining tended to open the couplings at the top after the straining was commenced, nothing would ever close them again. Tapered bolts could be made a thoroughly good job with straight and true shaftings, but preferably he favoured parallel bolts as best holding the couplings together under the various conditions which occurred in practice.

He was distinctly at variance with Mr. Chaston as to the advisability of after tail bearings. Twenty years ago, when his duty took him more frequently amongst small steamers in the coasting trade, nearly all of them were fitted with rudder post bearings, and he very soon found that these were a source of great risk to the shaft. It used to be a common experience to find that the bearings were worn sideways, not up and down; and that came about through the pressure on the rudder. They all knew that an iron shaft or an iron post was not rigid. When a vessel had her rudder put over, the water pressure on one side of the

rudder sprung the rudder post, however strong they made it, and if there was an after bearing attached to the post that pressure was partly transmitted to the extreme end of the tail shaft. He believed that to be the cause of the then frequent breakages at the tail shaft between the propeller and the after liner. A change of practice took place twenty years ago: the after bearings were discontinued; there was very much less breakings of screw shafts. He thought it would be a very bad thing to go back to after bearings; they would be supporting the rudder by the shafts, and that was not what shafts were wanted for. If the posts could be made to support the shafts it would be a different matter. In heavy weather, with the blows of the waves on the rudder, they would have these side strains intensified. Mr. Chaston expressed his preference for fitting the coupling bolts in the ships. He (Mr. Milton) decidedly disagreed with him—for this reason: In the shop they could, if they liked, take reasonable pains to get their two shafts absolutely true with one another. In the ship he did not think they could do the work so well; but even if they could, there was no benefit in doing it in the ship. If they had the shafts properly fitted in the shop, then they would go together correctly in the ship; but if in the ship the shaft should happen to get as much out as Mr. Chaston said ($\frac{1}{64}$ inch) when the shaft was turned round a half revolution it would double their error. Mr. Chaston made some remarks upon corrosion, which he would refer to presently.

Referring to Mr. Caws's paper. He had not the pleasure of knowing Mr. Caws, and he did not know what Mr. Caws's experience was; but there were one or two points which made him doubt whether Mr. Caws was a marine engineer. He said, "Perhaps steel-drawn tubes may be adopted for shafting." He (Mr. Milton) did not think that was practical. The question of material of shafts was rather a vexed one. The majority of shafts were made from forgings from iron scrap. Unfortunately, it was very difficult to get any large quantities of scrap iron of uniform quality. Many people had the impression that iron was iron, and therefore was preferable to anything else, and was a better material than steel. His opinion was, that iron was a mixture of all kinds of scrap, and when making iron forgings they had a risk of getting unhomogeneous material. With any structure subject to stress, having some parts harder than others, as soon as the stress came on the harder parts they took up more than their portion of the stress and the softer parts shirked the work. A shaft made of hard and soft material was, therefore, likely to break down in detail. That could be got over by

making their shafts of one uniform quality of material. That was a very desirable thing. He thought tail shafts, subjected to so many strains, should be made of the very best material obtainable, and if iron was better than steel for the purpose, then they should aim at having the best iron—uniform iron. Some engineers were prepared to make such shafts of a very high quality, but they necessarily cost more than those made of common scrap. Many shafts, however, were made of steel, and large shafts must always be made of steel. When they came to the size of 18 inches or so, it was almost necessary, from the difficulty of making forgings from scraps and blooms, to go into steel, and nickel steel, he thought, was the best material for such shafts. Nickel steel had some very peculiar properties compared with ordinary steel. If they took a piece of nickel steel and a similar piece of the same strength of ordinary steel and bent them by repeated blows, there was not very much difference in the results—the same blow would bend the ordinary steel or the nickel steel to the same amount, and a piece of ordinary steel stood as many bends backwards and forwards as nickel steel; but if they put nicks across the two pieces and bent them they would find the most marvellous difference. The nickel would stand many bendings and rebendings with the nick, the ordinary steel would not stand any. When a slight flaw came into an ordinary steel shaft every repetition of stress upon it tended to extend the flaw rapidly; with nickel steel it would not: it seemed to have a fibre or toughness altogether absent from ordinary steel, which prevented flaws or cracks extending in it, and for large shafts he strongly advocated the use of nickel steel on that account.

With regard to the question of smaller shafts, whether steel or iron was preferable, he might mention that some eighteen years ago he had a peculiar experience. The twin-screw cable ship "Faraday," belonging to Messrs. Siemens Brothers, had the misfortune to break a tail shaft. Sir Wm. Siemens was a great advocate for steel for everything. Her original shafts were iron, and had been in use for seven years; the engines were made at Elswick by the late firm of Thomas Clark, and the shafts were rather small for the power of the engines. After seven years' work one of the screw shafts broke. Sir Wm. Siemens insisted that two new shafts should be made of Siemens steel, $1\frac{1}{2}$ inches larger in diameter than the original shafts, and one of the new shafts broke on the first voyage. He (Mr. Milton) saw the shaft when taken out. It had broken sharp through at the forward end of the after liner. There was not a rust mark on the shaft, it was not a case of corrosion, it broke clean down at the liner. Sir Wm. Siemens saw it, and had both new shafts taken out

and replaced with fibrous iron shafts made at Darlington, and both these shafts were still in the ship. This experience was not an isolated one.

Then as to the figures about the mortality of shafts. In February, 1897, Lloyd's Committee had the whole matter of the replacing of shafts very carefully looked into, and some of the figures obtained were instructive and well worthy of note. Their attention was drawn to the matter by several consecutive failures of shafts at sea. With regard to classed vessels there had been 26 casualties in the period to which their attention was drawn; but the figures showed that there had been 1,506 new shafts fitted into old classed vessels during the previous two years, showing that the number of failures of shafts at sea were very small compared with those taken out and renewed. During the last year, 1898, there had been 173 casualties to shafts at sea, of these 83 occurred to classed vessels, and he had no doubt whatever that the number of shafts renewed in classed vessels in the same period without breaking at sea would be found to be at least 1,000, so they would see that the question of shafts was an exceedingly important one. In speaking of these 89 casualties in classed vessels, they must bear in mind that the proportion of classed steamers to the total number of steam vessels was a great deal larger than this proportion of casualties, so they must not think classed ships were exceedingly unfortunate, on the contrary the comparison was much in their favour. Out of the 89, 75 were screw shafts, and out of that 75, 35 lost their screws as well as their shafts at sea, so that 35 of the fractures occurred aft of the after liners, although most accidents and most defects did occur at the forward end of the aft liner, the aft side of the aft liner therefore required to be looked after as well. Mr. Caws seemed to imply that most of the accidents occurred in large, unwieldy ships. He could not say that was so. In looking at these actual figures he found they were fairly well spread over all the sizes of vessels. Now, one important point to remember was that the work now required of a cargo steamer was vastly different to what it was ten or fifteen years ago. The conditions of trade were now such that very many steamers made long voyages in ballast. Modern steamers were larger, fuller, and lighter than the old ships; and steamers now went on Atlantic and other long voyages with propellers half out of the water. Of the 89 casualties he found 26 occurred to vessels stated to be in ballast at the time of the accident, 30 in loaded vessels, and in 33 there was no record of the loading. Out of the 89, 43 were in the North Atlantic trade—the heaviest trade in the world—and of these 43, 18 were in ballast, 10 were stated to be loaded, and the remaining 15 had no

record; 18 of the casualties occurred in the Mediterranean and of these 7 were reported to be in ballast. Whilst there were, therefore, a number of the accidents occurring with the vessels actually in ballast, in a number of the others the damage might have been commenced in ballast on a previous voyage, and finished when coming home loaded. He thought the question of ballast had a great deal to do with the question of damage. He thought Mr. Caws spoke of the stiffness of shafts, as though shafts had been broken by the bending of the ship. He strongly questioned that. Most of these accidents, and most of the condemnations, were in screw shafts. The defects in the screw shafts were either at the after end outside the ship, where all the wriggling of the ship would have no influence at all, or in the stern tube; and how any motion of the ship could affect the shaft inside a cast iron tube without damaging the tube he could not imagine. It would affect the tube first, but they had not any defects of the cast iron tubes recorded.

He would like to speak on the point of "linability." If they allowed a shaft to wear down and tried and calculated what strain was in consequence put upon it, they would find it to be very great; they would find in a 15 feet tube $\frac{3}{8}$ inch out of line, a 12 inch shaft would be strained at least 25 per cent. in excess of the strain due to the power of the engine, and yet scores of engineers did not think this amount of wear to be a serious matter. He had heard of shafts running more than $\frac{3}{8}$ inch down. The bending strain due to a wear of $\frac{3}{8}$ inch not only brought an enormous strain upon the shaft, but it must be remembered it was bent every revolution of the engine, and if they looked at the counter at the beginning and end of the voyage they would see how many bendings their screw shaft had had. A question had been raised about the cause of so many breakages of shafts If they examined an ordinary screw shaft, the iron part of it was parallel until they got to the taper part going through the propeller. In the part taking a bearing in the stern bush they had the after brass liner fitted on perfectly tight, that made the diameter at this part about $1\frac{1}{2}$ inches larger than that of the plain parts of the shaft. If the liner was made of good strong gun-metal and shrunk well on, then the adhesion between the brass liner and the iron was such that the strength of the shaft at that part was largely increased; between the liners the strength was suddenly decreased, and largely increased again at the forward liner. When they had got any piece of mechanism subjected to varying strains and necessarily of varying section, engineers generally—all engineers, locomotive and marine—tried to put a large fillet at the change of form or to make the change as gradual as possible. Here

they had nothing of the kind, they had an abrupt change from liner to naked shaft, and especially seeing that the stresses due to bending were continually changing from tension to compression every revolution, they could expect nothing else in such a tail shaft, than that at the parts where these changes of form took place the material would be unduly stressed and likely to fracture. If they made the shafts like that they must have a concentration of stress near the ends of the liners. If the shaft began to corrode at these parts, which it did from the dissimilarity of the metals and other causes, they got this matter intensified. The same thing happened in the after end of the liner, they had a sudden change of form and strength just where the shaft entered into the propeller, due to the step down from the liner to the plain iron shaft, and this at the part where every blow of the sea upon the propeller tended to bring the greatest bending strain on the shaft. It need not be wondered at that that part was also a critical one, and when ships went long ballast voyages they must expect that these shafts would be liable to break there. To get over these difficulties it had been suggested in 1897, when an alteration of Lloyd's rules was made, that liners should be tapered in thickness at their ends as far down as they could be tapered to make the change of strength as gradual as possible, or that the liners should be made in one piece the whole length of the stern tube. He strongly urged that the after liner should be also tapered in thickness down to the point where it went into the propeller boss. They could make the tapered end water-tight in the boss, that was not beyond the powers of engineers. If they could not ensure water-tightness between the shaft and the liner, they could make it water-tight between the boss and the liner and keep the water out altogether. That would, he thought, prevent a good many breaks of shafts at the propellers. With regard to corrosion, in his opinion the liners should be made in one length, but on this point there was a difference of opinion, and he thought there were reasons for the diversity of opinion, for every engineer had different experiences from others; and this difference of opinion which they found amongst engineers was a healthy indication that they were thinking of their own work and trying to get at the best results. Many objected to the continuous liners, saying that they could not discover any defect which might be under them. Others thought that if they did not cover the whole length of shaft corrosion would take place and lead to disaster. Out of the 75 screw shafts he was speaking of, 32 of them broke within two years' service, and that showed how quickly some of the shafts deteriorated. In regard to the covering of

shafts with a continuous liner, it was thought by some to be a very difficult problem. There were, however, some engineers who had faced it, and did not find it at all so difficult as it was thought to be. To make a liner of two pieces and trust to a half-lapped shrunk joint was to make a joint worse than useless. On the other hand, some experiences with burned joints had not been very satisfactory. They could, however, make such joints absolutely good by shrinking the liners on separately, leaving a little space between them and burning them together. Some engineers feared to make the liner in one length, but Messrs. Maudsley had put on plenty of liners 20 feet long in one length. But the great difficulty in putting them on in one length was to thoroughly appreciate what they had to do with the liner. In fitting a liner on of course they had to turn it inside, slightly less in diameter than the size of the shaft; then they had to make it hot, to expand it so as to enable it to be put in place. It not only expanded in diameter, but expanded in length to a considerable amount. It was a very important matter to get it equally heated all round. If not uniformly heated all round some amount of bending would take place, and the liner could not be put in place. The next point was, in putting them on they should not be allowed to cool down and contraction to take place at haphazard. The aim should be to cool the liner at one end first to make that end grip the shaft, and then to gradually cool the remainder, commencing at the cool end and working towards the free end. This prevented any strain being set up lengthways. This was best attained by putting the shaft vertically, and the liners of big guns were put on in that way; but with care it could be managed horizontally. What he had said about the continuity of form applied even to liners. If they made their liner in one length it would not do to make the thin part where there was no bearing abruptly join to the thicker parts at the bearings; the change of form should be gradual. If liners were put on with half-lapped joints, not burned, the joint formed not only a place where water could get in and set up corrosion, but also a point of discontinuity of strength. Many engineers seemed to think that corrosion was the vital point to them. Corrosion was a vital point, he (Mr. Milton) admitted. It was not the only point amongst those questions which had to be considered in regard to shafts. A plan had been adopted, especially amongst the Swedes, of running screw shafts without any liners at all, and keeping the tubes full of oil. It had answered admirably in small vessels. On the other hand, it was an unusual thing in British steamers, and required a certain amount of constant attention. In a recent case where this arrangement had been

fitted, after the very first short run of the vessel, the shaft was found to be worn down 1 inch in the tube. He thought, probably they had forgotten to put the oil in; at any rate, both shaft and tube were spoiled, and had to be renewed. Another case he noticed where shafts had actually seized at sea, and the white metal bearing in the tube had to be melted out before they could draw the shaft. If those fittings were used they must drill their engineers into using them properly and properly supplying them with oil. Many vessels were fitted with shafts running without liners in plain bushes; but he was sorry to say, in one or two cases there had been so much trouble as to compel them to go back to the brass liners and lignum vitæ bushes. He had been told that a plan sometimes adopted was to run the stern tube full of a mixture of oil and tallow, with the idea of keeping out the water. After several years' experience, this plan was stated to have given good results. They must not think there was one panacea for all these difficulties with shafts. It was a serious problem; it demanded the attention of all engineers, and he should be very glad to hear others' experiences in the matter. Very many engineers had been kind enough to send to Lloyd's their own experiences and views, and they were very much obliged for them.

Mr. J. R. FOTHERGILL (Vice-President) said, after the very able and interesting address which Mr. Milton had just concluded, he felt there was little left for him to say, more especially as he was in accord with much Mr. Milton had said. Although they might not fully agree with the writers in all they had put forth, yet they must feel beholden to them for bringing forward this most important subject, "Propeller Shafts," as a basis for discussion, so that members of the Institution could give their experiences on a matter of such great interest at the present moment. He fully agreed with Mr. Milton in regard to the desirability of fitting shafts together in the shop; he altogether failed to see how it could be otherwise, or what possible advantage could accrue by fitting on board the ship. At the last meeting he thought Mr. Andrew had "hit the nail on the head" when he gave it as his experience that shafts being allowed to get out of line was the cause of many defects and troubles with crank shafts and couplings. His (Mr. Fothergill's) experience was much the same, and there was no doubt workmanship often had to take the blame that was directly attributable to want of keeping the shaft in line. Relative to coupling bolts, personally he was in favour of parallel bolts. He failed to see there was

more difficulty in fitting a parallel bolt than a tapered bolt. There was one consideration they must not overlook: it was a very different matter in many of their high-class works, with all the conveniences, tools, etc., to fit a tapered bolt, but it was quite another thing when the work was in the hands of ordinary repairing shops. With a tapered bolt it was absolutely necessary that that portion of the small end of the taper which entered the second portion of the coupling should be clear of the coupling, as it was evident if such was not the case the couplings could not be drawn together, and sooner or later trouble must arise. On the other hand, if this end of the bolt was made too slack the coupling would work, and thus it would be seen there was great nicety required in properly fitting a tapered bolt. He was afraid, although this was well understood, it had not always that consideration it required, and thus one important reason why he preferred parallel bolts. Perhaps the greatest objection to the parallel bolt was the difficulty often experienced in getting it out. Mr. Caws appeared to treat the subject as one more particularly of diameter of shaft. Of course it was possible to make a shaft of such diameter that nothing could break it; but as Mr. Caws well realised, there were many considerations governing the diameter. By increasing the diameter they increased the rigidity, and this appeared a very doubtful course to take. In his experience, he (Mr. Fothergill) had seen many shafts purposely made considerably larger than required by Lloyd's rules; yet he could give several cases in which they had stood no better than if they had been to Lloyd's rules only. With the introduction of the triple engines Lloyd's had allowed a small reduction in shafting. It might appear doubtful if this was a wise policy to have taken.

Mr. Caws was of the opinion that large steamers suffered most in defective shafts. He could not say that was his experience. He thought the steamer that suffered most was the modern type of cargo steamer, irrespective of size, but having great beam, shallow draught, and making a considerable number of voyages in ballast. Although crossing the Atlantic in ballast was exceedingly severe, yet under such conditions they usually had a large quantity of bunkers, and in addition to this the majority of owners put on board additional ballast. Where a steamer suffered most was in such passages as from Hamburg to Cardiff in ballast. She left Hamburg with two to three days' bunkers in excess of the quantity required to take her to Cardiff, and thus she was in the lightest possible trim, the propeller boss frequently half out of the water. Imagine the condition of such a ship caught in a gale rounding Lands

End. The wonder was not that the shaft broke, but that it stood at all. Take a shaft 12 inches diameter, propeller 17 feet diameter, weighing 6 tons, say, under ordinary conditions the revolutions were 60. When such a propeller completely left the water the revolutions might run up to from 100 to 120. At 100 revolutions the periphery speed would be 5,340 feet per minute. It was not difficult to understand that the resistance necessary to overcome the inertia of the mass at this velocity must materially affect the life of the shaft. The effect was not so severe when the propeller left the water, because it already had a high velocity; but on immersion the revolutions were often reduced in a few seconds from, say, 100 to practically *nil*. He had often seen engines brought to a stand under such conditions. Again, take the condition of a modern light draught steamer in ballast in fine, smooth weather, with only half the propeller immersed. The bending strain on the end of the shaft must be very severe, as all the thrust would be on that portion only of the propeller immersed. He had examined a very great many shafts, both broken and in all stages of fracture, and no better scrap heaps for such examination could be found than in South Wales. He must say he had rarely seen a defective shaft that showed an absolute clean fracture; all showed more or less surface defect at the point of fracture. In his opinion, the action was mechanical in its origin, but developed with great rapidity by corrosion to rupture or an unsafe condition. The majority of shafts went at the fore end of the after liner. The action appeared to be, particularly under light ship conditions, when the various strains upon the shaft were most severe, that minute cracks or fissures running in no defined direction were produced, these cracks in the immediate neighbourhood of the brass liners were galvanically acted upon, rapid corrosion developed, and the shaft became unsafe. The rapid corrosion was due to the severe strains throwing off or breaking the surface covering of corrosion at the point of fracture, leaving the metal bare to fresh galvanic action. Although the corrosive action was not the primary cause of destruction, yet by its rapid development, particularly under conditions of exceptional strain, it undoubtedly was the most destructive element in the life of the shaft. That this was so was evident by the prolongation of the life of a shaft when thoroughly protected. If the corrosion at the point of fracture was carefully scraped off and analysed, evidence of brass could be traced, leading to the assumption that not only had they the electric couple in the brass liner and metal of shaft, but that the fine wearings of the brass liner played their part. He had seen shafts which, when thoroughly protected, had run for years under the

same condition of strains, and it was for this reason that he was of the opinion a shaft to Lloyd's rules was strong enough.

Mr. Milton dwelt upon the necessity of tapering the edges of the brass liners. He might say most firms had done this for years, but it was difficult to prove it had been of any benefit. He had seen several cases where, at the fore end of the after liner and the after end of the fore liner, the shaft had been protected for about a foot in length with well tallowed canvas securely lapped with marlines. Where the shaft was protected it was perfectly sound, but at that point where the lapping ceased the old familiar corrosive cracking commenced. This appeared very clear evidence that the lapping insulated the shaft from corrosive action, and that action immediately commenced where insulation ceased. This appeared to him to have one construction only: stop the corrosion by protecting the shaft, and you prolong the life of the shaft. He could only therefore repeat, the origin was mechanical, from the many strains exerted, but the direct cause of destruction was corrosion.

As to the question of material, he was in favour of forged iron as against steel, but the iron should be specially manufactured for the purpose, so that a continuity of material could be ensured. He knew of one firm who were having special sections of best iron purposely manufactured for this purpose, and, he understood, with most satisfactory results in the forging. Best scrap iron was very difficult to obtain in the market, and the usual shipyard scrap was of such a miscellaneous nature as to be unreliable. He had seen shafts broken in which portions of the material were as hard as flint and the other portions quite soft; this led to the opinion that it was desirable after forging to anneal. He thought greater attention might be paid by Lloyd's to inspection. He was thoroughly alive to the very able and valuable Lloyd's inspector they had on this coast, but one man could not be everywhere, and it was a large district.

The question had been raised as to "fatigue of material." Railway experience showed serious consideration had to be given to this subject, and it was more than probable shafting was so affected. The only way to overcome fatigue was to anneal, but he should say it was very doubtful if, when a shaft arrived at such an age as to be fatigued, it was worth the cost of annealing. He could not but express surprise at what they had heard from Mr. Milton about stern bushes being allowed to wear down to the extent of nearly $\frac{5}{8}$ inch; certainly no shaft could stand such treatment long. It had always been his practice never to exceed a $\frac{1}{4}$ inch,

and at this he felt he was safe. He most heartily supported Lloyd's in requiring propeller shafts to be drawn every two years; he would even go further, and say that every modern light draught steamer doing considerable work in ballast should examine their propeller shafts once a year. In fact, he knew cases in which shafts had not run twelve months. In conclusion, he would summarise the whole question in the opinion, that let price be no object, and he had no hesitation in saying a satisfactory shaft could be obtained. He hoped there would be a good discussion, and the subject thoroughly thrashed out.

Mr. MILTON said Mr. Fothergill had reminded him that he had made no mention of the diameter of shafts. Some people had thought that the question of the lifetime of shafts was mainly a question of diameter, so a few facts regarding diameter would, perhaps, dispose of that idea. At present Lloyd's rules were that the diameter of the screw shaft should be 10 per cent. larger than the diameter of the tunnel shaft. Increasing a tenth of diameter meant an increase of 33 per cent. in strength; experience showed that defects did not often occur in the tunnel shafts. If they made a screw shaft larger still they really would get something he had been trying to point out, viz., a great discontinuity of strength at the junction of the screw and intermediate shafts. If they had very much larger screw shafts, without increasing at the same time their tunnel shafts, they would find that the action of the seas on the propeller would strain their tunnel shafts, so that if they largely increased their screw shafts they must increase their other shafts as well; experience, however, showed that larger screw shafts did not cure the evil. He had a table showing the experience of six years' work of all the classed vessels built from 1891 to 1896 inclusive. Now, some engineers habitually used larger shafts than others, and to take one particular instance, there was an engineering firm who did a very large business, whose shafts were made at their own forge with the greatest care; they were almost invariably made of iron, selected from the best they could get. Their tail shafts had an average excess of strength, 53 per cent. above Lloyd's rules. Surely there was a case, if diameter was the important point, where there should be no breakages whatever. In many of the vessels engined by this firm shafts had been renewed, in some cases even in the first year of service. The average life of the screw shafts which were actually renewed in 38 of these ships, was 3·7 years. He took another maker, where instead of 53 per cent. the average excess of strength was 16·8, and he found a less proportion of

the shafts were actually renewed, while the average life of the shafts renewed was 4·4 years, a longer average life than that of the larger shafts. Now, the question was not one of diameter so much as of other considerations, and the one on which it so largely depended was the trade. The firm of which he had been speaking mainly engined vessels engaged in the heavy cargo trade. The other firm's engines were generally placed in finer lined ships which did not run ballast voyages. Now, with all the engineering firms there were many shafts made by each firm, without going into excessive sizes, which stood well for six or seven years and even longer. He wished clearly to be understood: the question of diameter, although an important one, was not the only one, and that an increase of diameter would not cure the evil.

Mr. H. Fownes (Vice-President) said if Mr. Fothergill felt some diffidence in following such a distinguished authority as Mr. Milton, how much more so must he feel in the superlative degree in following such a distinguished authority as Mr. Fothergill. He had listened to Mr. Chaston's paper with great interest and appreciation, not out of a spirit of contrariness because he had heard it adversely criticised by several outside the bounds of the Institution meeting, but because it was, so far as Mr. Chaston's knowledge and experience was concerned, a drop of practice amongst the gallons of theory with which they were so apt to be flooded in this and kindred institutions. Also, Mr. Chaston represented a body of very able men whose knowledge and experience were too little heard of in this Institution. Speaking as a forgemaster and as a maker of shafts, it was quite refreshing to hear that there might be some other causes for the failure of propeller shafting beyond faulty material and workmanship. He had often been twitted, by shipowners particularly, that the material in use now for manufacturing shafts was far inferior to what it was say fifteen years ago, and also that the workmanship had equally deteriorated. Now, he ventured to state here his deliberate opinion (for what it was worth, of course), that such statements were nothing better than popular fallacies. The much-abused scrap steel, so largely used now, was infinitely superior as a material to what the so-called wrought scrap iron was fifteen years ago or so. The workmanship was far superior, due in a great measure to the watchful care of Lloyd's forging surveyors in this district, and for those owners and engineers who choose to avail themselves of the opportunity the appliances were also greatly advanced. As regarded inspection so far as this district was concerned, it was in the hands of most capable men, was most thorough and

searching, and went quite as far as it should do. Anything further would probably become annoying to manufacturers, and apt to stifle private enterprise; as it was, undoubtedly the aim of most, if not all, manufacturers to turn out the best work they could apart from any inspection. Of course, he did not mean to say but that accidents might and would occur, as it was impossible to see inside a lump of iron or steel, or that steel was not more liable to corrosion than iron under certain conditions, which might and no doubt would be materially improved. By certain additional working scrap iron shaft forgings might be materially improved, but not without extra cost, and as Mr. Manuel put it in his most sensible letter, there was very little inducement nowadays for manufacturers to launch out and supply something better perhaps than was usually supplied because they could not get the price for it. He would not attempt to discuss the various points in Mr. Chaston's paper, because he did not profess to be experienced in what took place at sea, nor did he feel called upon to suggest remedies for the present state of affairs, nor to make out a long list of complaints; it was sufficient for him to say that he did not think, indeed he was certain, it was not due in most instances to defective material and workmanship on the part of the forgemaster and his workmen. Doubtless, various qualities of material and workmanship could be produced according to price, but even the cheapest article under both heads was not so bad as some people would like to make out. He noticed an article in a well-known shipping paper that week referring to the want of homogeneity in the material used for making shafts. Now, if the writer of that article had carefully inspected the arrangements of four or five of the largest forges in the United Kingdom he would see for himself the great care exercised under this head. In principle this was one of the reasons why he stuck up for Mr. Chaston's paper; he spoke of things as he found them, and it was not hearsay or paper-work. He took exception to the remarks of that same writer, that failures of shafts were more greatly due to defective forgings than anything else; and again, if he objected to the material in use, why did he not suggest something better? The owner of the ordinary tramp could not afford to pay for the highest quality of pressed steel shafts, so he had to content himself with something cheaper, and he used shafts made out of old iron scrap, or new iron if he would pay for it, although this latter could be made to be dearer than even pressed steel, over which it had undoubtedly many advantages. Harking back to Mr. Chaston's paper, in many instances the shafting of an ordinary tramp boat had no chance; in one point

particularly, where there was only one journal in a length of tunnel shafting, the length between couplings ought to be restricted to say 17 or 18 feet according to size. Thrust shafts were best made of steel and as short as possible, leaving only sufficient length on each side of the thrust to get the coupling bolts in and out. By all means protect tail shafts with long liners in one piece. If these and some other points received more attention at the hands of shipowners and engineers the shafting would have a chance of life, which in many cases it had not now. Whatever Mr. Chaston's paper might be as a literary performance, and it must not be forgotten he was perhaps more accustomed to use the hammer than the pen, it had at least done this much by calling attention to a most important question and provoking a most interesting discussion.

Mr. PERCY F. C. WILLCOX said he felt some diffidence as a young man coming after those so much more experienced; but as an engineer he had been much interested of late in the subjects so ably dealt with by Mr. Chaston and Mr. Caws. The very large number of shaft failures of late clearly indicated that engineers must take some definite line of action to do away with the evil, or even if they could not entirely eradicate shaft failures, he ventured to think that if the members of a large and influential Institution like their own put their heads together and discussed such a matter from the standpoint of their own experience, much could be done to solve the problem. Mr. Chaston's paper dealt chiefly with defective coupling bolts and the alignment of shafting, and he seemed to have had a very bad experience with tapered bolts; but it was clearly evident from the specimen bolts shown that bad workmanship was the cause of the trouble. He (Mr. Willcox) was for some time connected with a Clyde firm who made a specialty of shafting, and tapered bolts were invariably fitted in built crank shafts. These were turned to gauge, and standard reaming tools were used to reamer the holes out while the shafting was erected in the shop. He never heard of any of these bolts giving trouble, and engineers of vessels fitted with the shafts had invariably stated that they were giving satisfaction. It was his opinion that parallel and taper bolts could both be made to give satisfaction if well fitted. With regard to tail shafts, he had looked through a number of survey reports which his firm had made during the past year, and he found that fifteen tail shafts were dealt with. Of these, two fractured at the top of cone, and the propellers were lost at sea; five were found to be fractured at the top end of cone, and were condemned; and of these five, three were broken over a bar for examination, and in

none of the five was there the slightest sign of corrosion, but all showed highly crystalline fractures. Five were fractured at the fore end of aft liner, and of two of these there was clear evidence that the fractures were caused by the propellers striking quay walls. One of these two shafts was sixteen years old, and was passed as sound by Lloyd's four months before fracture, so that they could safely say the quay wall was answerable. Of these five shafts, not one was corroded enough to be answerable for the accident. The remaining three were, in his opinion, caused by bad manufacture, two having fore and aft laminated fractures from the aft coupling, and one was split the full length of the keyway. Of the fifteen, it was his firm opinion that eight fractured on account of not being strong enough to resist the excessive bending and torsional strains set up while the vessels were in ballast and pitching and racing in a heavy seaway. He might state that the eight vessels with these shafts were engaged in the Atlantic trade, doing light ship passages one way, and the shafts all fractured before being two years old. Now, they had Lloyd's rules as to size of shafting, and so long as they remained as they were no single engine builder could afford to increase the size of his shafts and compete with engine builders who did not; so they must look for some other assistance beyond Lloyd's and the engine builders; and whichever way they looked, it seemed to him that higher first cost had to be faced before anything could be done. Of the two strains causing propeller shaft failures, he thought it would be generally admitted that the bending strains caused by the weight of the propeller combined with the vibratory strains set up when a propeller was thrashing the water when half immersed was the principal stress, and the one to be calculated for. In a series of tests made by Prof. Unwin on steel railway axles, running at usual railway speeds and loaded at the ends to represent the weight on wheels, he found that with a plus and minus load of 16·3 tons per square inch the axle broke after 51,240 revolutions. When the load was reduced to 12·4 tons per square inch the axles ran 564,900 revolutions before fracture, and proved that with a reduction of load of 24 per cent. the life was increased eleven times. This clearly pointed to the fact that if they reduced the weight of the propeller 25 per cent. they could lengthen the life of the shaft very considerably. It was not possible to lighten cast iron propellers to any great extent, but they had found that in many cases it could be done to the extent of 8 per cent. and still retain enough strength if good material was used. A reduction of 25 per cent. in weight could easily be obtained by using propellers cast solid in bronze, which at the same time gave other advantages, such as long life to the propeller

and increased efficiency. The next method of providing for the stresses was to increase the strength of the materials used. The strength of a good iron shaft well made might be taken at 22 tons with the grain and 19 tons across, with an elongation of 15 per cent., depending upon the quality of the scrap; and even if made from picked bar it was doubtful if they could get a stronger shaft than 25 tons. Steel shafts forged from ingots made by the Siemens-Martin process generally gave a strength of 30 tons, with 28 to 30 per cent. elongation, or about 36 per cent. stronger than the iron shaft. Nickel steel, having now proved reliable, was being much used for high-class work, and deserved consideration. Shafts were now being made from it having an ultimate strength of 40 tons, with an elastic limit of 28 tons and an elongation of 20 per cent. Here they had a material having an elastic limit equal to the breaking strength of mild steel, and about 30 per cent. higher than the breaking strength of iron. It had proved to be extremely difficult to break when subjected to bending stresses when nicked and revolved at high speeds, and seemed an eminently suitable material. He thought it would be admitted that they had the means and materials at their hands to lengthen the life of shafts; but, so long as Lloyd's and the Board of Trade stood still, he was afraid that it would remain for the shipowners to protect themselves individually, and it was for them to consider whether it would pay them to specify stronger materials or go on using the material that had been found so often wanting. He thought that it was more than likely that a shipowner using the better-class materials he had mentioned would have his vessels practically free from shaft failures, and would therefore be able to exact a considerable reduction in insurance premiums on his vessels. He had often thought that much might be learnt as to the behaviour of the material of tail shafts if a series of microscopic examinations were made from sections cut from broken shafts, such as lately made by Prof. Thomas Andrews on steel rails. Should there be anything in the suggestion, he thought that Prof. Weighton and others at their engineering college would be just the persons to carry out such an investigation, and he felt sure that their engine builders and repairers would give every assistance in providing specimens.

Mr. Hugo MacColl said that the two papers at present under discussion, as well as a recent circular issued by Lloyd's Registry and sundry newspaper articles, all seemed to point to the general feeling that the shafting of ships was not what it ought to be. The reasons for this

unsatisfactory state of affairs were in a measure due to the want of unanimity among experts, owing to the fact that the failures were not traced to one, but to several causes, and that each expert spoke according to his particular experience. The trouble seemed to be the fracture of the tail shafts or of the adjacent intermediate shafts caused by the tail shafts getting out of truth. Until about two years ago it was customary to make the tail shafts of the same diameter as the crank shafts, and in doing this it seemed to him that they completely ignored the strains referred to in Mr. Caws's paper, as coming into play when the propeller was used as an instrument with which to thrash the sea. What these strains amounted to it was very difficult to calculate as owing to the slackness in the stern bearing, especially after several months' wear and tear, it was impossible to determine even the effective length of the cantilever. Assuming, therefore, that this thrashing operation by light ships was one of the principal causes of fractured tail shafts the question arose as to how this was to be remedied. If shipowners could always arrange to run their ships loaded, or if shipbuilders could arrange to double or treble the quantity of water ballast, the problem might be to some extent solved, but he thought they might take it that the exigencies of the trade would not allow for this and they must, therefore, look to the engine builder to make the shafting strong enough to stand these strains. Lloyd's latest rule was to make the tail shafts 5 per cent. in diameter larger than the crank shafts, and he respectfully submitted that there was no reason why they should not be made 15 to 20 per cent. greater diameter. Engine builders were not philanthrophists but business men, and, therefore, individual members of that fraternity could not afford to do this unless the committees who fixed the classification of ships compelled their competitors to do so also. The principal reason he had heard advanced against this was the extra cost, which was surely a very small matter compared with the cost of renewals and consequential damages. There was no reason why the tail shaft inside the ship should not be reduced to the same diameter as the intermediate shafting so that the couplings would be all alike. Another cause of broken tail shafts was the corrosion caused by galvanic action at the ends of the brass liners. They knew that with special care this could be reduced to a minimum, but still he failed to see any more reason why they should brass line the tail shaft than that they should line the crank shaft. He believed it was time that the somewhat antiquated arrangement of stern tube generally fitted should be abandoned and something designed on more scientific lines adopted in its place. The lines on

which he thought such a journal could be designed would be to carry a bearing from the stern frame to the next or next but one frame forward. This bearing should be fitted with white metal strips arranged so that they could be renewed or adjusted from the inside of the ship. In larger ships a hatch should be fitted for access to this bearing, and where considerations of space would not allow of this being done some reliable apparatus should be fitted to enable the engineer to tell from the deck whether this bearing was heating or not. Such a bearing would have a very strong stuffing box fitted on the after end with a very strong guard plate fitted round it, and, if possible, gear arranged for screwing up the gland from the inside of the ship or from the deck. Suitable means should be fitted for lubricating this bearing from the deck; the white metal should be of a special mixture to stand the heavy strains caused by the pitching of the ship; and, as before mentioned, the bearing should be adjustable, as it seemed an absurdity that the two principal bearings in the ship should be the only ones made without adjustment in first-class work. The next bearing forward should be like an ordinary shaft carriage but with a strong cover lined with white metal. In the case of long after peak tanks a recess should be formed to take this bearing. The forward bulkhead of the peak tank being fitted with a stuffing box to form a water-tight joint only. Mr. Milton had said that diameter was not everything, but he ventured to state that it was something, and that if the diameters of tail shafts were made somewhat more in proportion to the excessive strains they were called upon to bear, and if they were properly supported in adjustable bearings instead of being left free as at present to jump about they would hear of fewer breakages.

Referring to the papers more immediately before them, that of Mr. Caws's seemed more suggestive than dogmatic, and was therefore not open to criticism. He had often thought that if engineers could be induced to read papers on their mistakes and failures instead of on their successes or imaginary successes, much information might be gained. Mr. Chaston had gone somewhat on these lines, and had at least given them the benefit of other people's mistakes that had come under his observation, and had graphically illustrated some of the preventable causes of shaft failures. He did not agree with the system he advocated of reaming the coupling holes on board ship, the object being to get the shafting in a true straight line. He submitted if this could not be done in the shop with plenty of space, it could not be done any better working in the confined spaces of a ship's tunnel. The cause of the defective

workmanship illustrated on Plate IV. was too evident to require comment: the foreman who used a template of the kind illustrated proved himself quite incompetent for such a position. The template should have had the rims about ½ inch deep turned a tight fit for the shaft coupling. The recess and spigot shown were of no use and could only be a source of trouble, the template should therefore have had a centre hole about 9 inches diameter cast through it, and the money so saved used to rebush the holes when worn slack. Care should be exercised in applying the template and the shafts marked accordingly and brought to these marks when closing up on board ship, as however carefully the holes were divided it was better not to trust too much to their being an exact mathematically correct spacing. His own practice was to rosebit the couplings in a vertical drilling machine to a template as above described, and the holes came in perfectly true and accurate. The stool illustrated on Fig. 1 (Plate IV.) should have been built against the ship's side for stiffness and leave a passage on the other, and that shown on Fig. 3 (Plate IV.) also illustrated defective design. Plate V. illustrated further defective workmanship. He agreed with Mr. Chaston when he advocated parallel instead of tapered bolts, but he did not agree with him as regarded the advisability of fitting an outside bearing on the rudder frame. Although this arrangement did well in the "Zambesi," it had given trouble in many other ships. The rudder post being of comparatively light construction was apt to get out of truth if it got a knock, and to carry the shaft end with it, when only a very expensive docking operation could get it again into truth.

Mr. J. W. Donovan moved the adjournment of the discussion on the two papers till the following meeting.

Mr. J. R. Fothergill seconded, and suggested a special meeting. The discussion must appear to be of enormous value to the marine engineering world.

The question was put and carried as suggested.

Mr. W. E. Cowen's paper was deferred till the next General Meeting.

The Secretary intimated that arrangements would be made to hold the extra meeting in Newcastle-upon-Tyne during the first week in May in accordance with Mr. Fothergill's suggestion.

The meeting then dissolved.

NORTH-EAST COAST INSTITUTION OF ENGINEERS AND SHIPBUILDERS.

FIFTEENTH SESSION, 1898–99.

PROCEEDINGS.

EIGHTH GENERAL MEETING OF THE SESSION, HELD IN THE LECTURE HALL OF THE LITERARY AND PHILOSOPHICAL SOCIETY, NEWCASTLE-UPON-TYNE, ON WEDNESDAY EVENING, 3RD MAY, 1899.

SIR BENJAMIN CHAPMAN BROWNE, D.C.L., J.P., PRESIDENT, IN THE CHAIR.

The SECRETARY read the minutes of the last General Meeting, held in Sunderland, on April 21st, which were approved by the members present, and signed by the President.

The PRESIDENT explained that this was an extra meeting for the further discussion of the two papers on screw shafting. He would point out that, besides, they had to read and discuss Mr. Cowens's very interesting paper on "Shop and General Charges." The discussion was adjourned on the motion of Mr. Donovan. He was at Cardiff, but had sent notes that would be put into the discussion. There were several other members who had put in written notes. In these circumstances, considering how valuable time was, if it met their views, they would proceed with the discussion and have these put into the *Transactions*.

The adjourned discussion on Mr. E. C. Chaston's paper on "Notes on the Manufacture of Shafting for Screw Steamers, with some causes of Defects and Failures," and Mr. F. Caws's paper on "Remarks on the Increasing Frequency of Failure of Propeller Shafts," was resumed and closed.

Mr. W. E. Cowens read a paper on "Shop and General Establishment Charges in Engineering Works and their Relation to Costs and Estimates."—The discussion was adjourned.

ADJOURNED DISCUSSION ON MR. E. C. CHASTON'S PAPER ON "NOTES ON THE MANUFACTURE OF SHAFTING FOR SCREW STEAMERS, WITH SOME CAUSES OF DEFECTS AND FAILURES," AND MR. F. CAWS'S PAPER ON "REMARKS ON THE INCREASING FREQUENCY OF FAILURE OF PROPELLER SHAFTS."

Mr. J. H. Heck (Lloyd's Surveyor on the Tyne) stated that he had discussed the question of the failure of propeller shafts with very many of the superintendents of the kingdom, and he would, therefore, express not only his own opinion, but the opinions of those with whom he had come in contact who had good reason to possess knowledge of the subject. He did not agree with Mr. Caws. He did not think that any more supervision was necessary. At present, those connected with forgings took every care that they could. The supervision was very good, and the selection of the scrap iron and scrap steel was very carefully done. The forges at the present time were doing better work than ever they had been during his experience. During the discussion he had heard various ideas put forward. He heard it stated that some of the failures were due to corrosion, some to galvanic action. In his opinion, after the examination of a great number, many thousands, he did not think that either of these opinions were right. In the great majority of the shafts which failed it was found that the defect was at the fore end of the after liner. If they found the failures at the fore end of the after liner, and they were due to corrosion or to galvanic action, why should they not find them at the after end of the fore liner as well? He had never come across a man yet who could explain why that was so. Yet he found, in 95 per cent. of the cases, that the failure was in the fore end of the after liner. He did not think that it was due to corrosion or galvanic action, but simply to fracture. They came to the question of what should be done to improve matters. He thought that at last they had been able to take the onus from the forgemaster and the engineer. He knew very well, of course, that it was possible to have a bad forging, but that was the exception. He believed that forgings, as they were now made, were as well made as it was possible to make them. What, then, were these failures due to? In the first place, it sometimes happened that the superintendent engineers wanted a vessel

very quickly. If the shaft was down a quarter of an inch, they did not want to draw the shaft and put new wood in. He thought that that was one of the causes, at all events. The main cause was that vessels were sent away in a light condition. Many vessels were sent away with the propeller-blade entirely out of water, and went across the Atlantic and the Bay of Biscay. To allow these vessels to do so was simply to mean destruction. It was only a matter of time. He knew that shipowners, if they were only told what was the right thing to do, would do it. Therefore, he thought it was really the province of shipbuilders to point out to shipowners the right thing to do, so as to enable vessels, when they were carrying no cargo, to be immersed in such a way that the screw propeller was not exposed.

Mr. James Stewart quite agreed with Mr. Heck as to the importance of not allowing the propeller shaft to get too slack in the bush, and thought that this was no doubt one of the contributing causes of broken shafts, especially in these days when so many vessels were sent across the Atlantic in ballast, a condition brought about by the exigencies of present day trade. But he did not agree with Mr. Heck as to that being the main cause. He might be wrong, but his impression was that the main cause of the large increase in the number of shaft failures in recent years was to be found in the material of which the shafts were made. He did not put it forward as a fact, because he could not prove it, but he would put it rather in the shape of a question to their forgemasters: What does the scrap used in the construction of those shafts generally consist of? Is it steel or iron or a mixture of both? Is it a material the parts of which unite readily and form a homogeneous forging? He thought not, and that in this deterioration from the more fibrous iron of former days was to be found the explanation they were in search of. If that were so, the question arose as to a remedy, and he could see a gleam of hope, in their last discussion, in the remarks made by their friends Mr. Fownes and Mr. Milton. Besides, individual shipowners had recognised the necessity for a change and had adopted other material, such as ingot steel or nickel steel; but he did not think that it should be left to the individual owner, who is handicapped by competition, as also is the engine builder; it lay more in the hands of the classification societies, who were in the best position not only to sift the matter but to apply the remedy, and to debar, if need be, a material which had been tried and found wanting. There was one point in Mr. Chaston's paper which he would refer to, namely, the

suggestion that they return to the plan of having a shaft bearing in the rudder post. Having had considerable experience of both methods, he had come to the conclusion that it was an improvement rather to dispense with this bearing, as being unnecessary. What they *did* want was a good long bearing in the stern tube; if this was made long enough and a satisfactory fit made, the bush would wear much longer than was frequently the case. And when the lignum vitæ got worn and required renewal it would be well if they could adopt the plan more frequently than they did of removing the bush and, after fitting the wood, boring it out to suit the shaft. The ordinary method of fitting in planed strips of lignum vitæ did not seem quite satisfactory, because by the time the ridges were worn off and the shaft had worked itself to a good bearing it might be too slack. The next question he would touch upon was that of corrosion and the remedies or rather the preventives suggested. Reference had been made to the plan of having the propeller shaft covered with a brass liner the whole length inside the stern tube. Now, although this had answered well in many instances, and he had known shafts fitted in this way work satisfactorily for years, yet there were objections to it and there had been failures. There were such risks as cracked liners or defective joints, admitting water and resulting in corrosion going on unseen under the liner; and as regarded periodical inspections, it did seem open to question if examination of the outside of the brass liner were altogether a satisfactory examination of the shaft. He would mention a case in point which had come under his notice. A shaft which had a continuous liner was drawn in for examination, an accident to the steamer having rendered this desirable. At first sight the shaft seemed all right, but on close examination a slight mark was noticed on the liner, which raised suspicion, and on a piece of the liner being cut off, the shaft was found to be fractured and was condemned. Another arrangement, which had been already mentioned and which had a good deal to commend it, was to dispense with the brass liners and the lignum vitæ entirely, and to have the shaft running in a metal bush and lubricated with oil. Mr. Rennoldson had told them of his successful experience with this in small vessels. Recently, he (the speaker) had taken the opportunity of having this arrangement fitted in two vessels, the shafts being 13½ inches and 14½ inches diameter respectively. As they had been at work for only about six months it was too soon to speak with confidence about them; but they had given satisfaction so far, although both were severely tested in the heavy gales in the Atlantic in January last. He mentioned them in order to point out the advantages of this arrangement. In doing

away with the brass—the main cause of the corrosion—the galvanic action was removed; and there being no liner there was no necessity for the sudden change of form, the importance of avoiding which was emphasised by Mr. Milton at the last discussion. In the cases he referred to, the shafts were kept up in diameter to what they would have been over the brass liners, and the portion of the shaft between the bearings was only reduced slightly below this size, thus avoiding the sudden change of form, and there was the additional advantage that the shaft was thus considerably in excess of Lloyd's requirements. He need hardly point out also, that in the event of a renewal being necessary, the shaft being a plain iron one it would be supplied in less time and at a smaller cost than one with brass liners. He thought they were indebted to Mr. Chaston and Mr. Caws for bringing forward a subject of such practical interest, and he hoped the discussion would lead to good results.

Mr. HECK said he had omitted one of the most important things. When vessels were sent away to sea in a light condition in the way in which they very often were, no increase in the diameter of the shafting—even if the shafting were made double the present diameter—would prevent them from breaking.

Prof. R. L. WEIGHTON (Vice-President) said he was at a great disadvantage in regard to these papers, inasmuch as he had not had the privilege of hearing what was said upon them at the previous meetings, and what he had to say, what had occurred to him on reading them had, no doubt, been referred to by previous speakers. He knew the great trouble writers took to prepare papers; and he hoped it would not be amiss if he criticised their conclusions. Unfortunately, he could not see that either of those papers suggested remedies which were effective for the defects pointed out. To take them in order, and briefly: In Mr. Chaston's paper it was alleged, and that quite legitimately, that shafting gave a great deal of trouble all the way from the engine to the propeller in a great many cases; and his remedy was to bore out the couplings in the ship. Now, that seemed to him to be an extraordinary remedy for the defect which he pointed out. The remedy lay obviously in accurate boring out of the stern post, etc., to begin with, and in placing the engines in a correct position, and the shafting would come in correctly if the couplings were correctly bored in the shop; and the explanation given of shafting dropping down $\frac{1}{4}$ inch or an $\frac{1}{8}$ inch could not be remedied by boring

the couplings on board ship, but by reboring the stern tube and resetting the engines. He thought that was obvious without the slightest doubt. In all his experience he had never known the boring of couplings out on board ship to be a practice. He should say it was going back to very primitive methods indeed. The obvious cure for shafting out of line, such as was shown by Mr. Chaston, was to reset the shafting, and if Mr. Chaston or anyone else were habitually troubled by such very extraordinary malconstructions—to give them a very mild term—then the cure was to go to better engineers and get better work.

Secondly, Mr. Caws's paper was of very great interest to him. Mr. Caws was a great friend of his, and he dealt with this subject from a theoretical point of view. It was, however, based, as he (Prof. Weighton) thought, on a misconception of the state of matters that had to be remedied. Granted that, of recent years—although it still had to be proved definitely by statistics—that the shafting of the class of big cargo steamers did give more trouble than the shafting of other steamers of smaller size in similar circumstances; as far as he knew, those failures were not due to the shaft being too small for its work. Now, that was one point; but the point he wished to touch upon was the proposed remedy which the writer suggested. He suggested that in any rule prescribing the dimensions of screw shafting, a factor should be introduced involving the displacement of the ship. That, to him, was an extraordinary proposal. If they considered what it was that stressed the shaft they would see it was impossible that that could be a cure. What were the stresses on the shaft? The one was torsional and the other transverse. The shaft was usually proportioned to take the torsional stress transmitted by the engine. The maximum transverse stress at the propeller was due to the weight and inertia of the propeller. Now, the motion of the ship's stern, say vertically, could only stress the shaft transversely, it could not stress it torsionally, otherwise perpetual motion would be possible. The rising or falling in the water did not bring torsional stress by reason of the momentum of the propeller; but it did bring transverse stress on the shaft as a cantilever. Now, the amount of this stress would depend entirely upon the size of the propeller. It was the means by which this transverse stress was brought into play, the stress being absolutely independent of the size of the ship. It could only be dependent upon the size of the ship if the ship's lifting capacity at the stern was small in proportion to the lateral resistance of the propeller. Now, whatever the size of the ship, her lifting power at

the stern would be so great that the propeller would have to go, whether the vessel was large or small. The "power" of the ship, as Mr. Caws called it, did not come in at all, for the small ship would equally stress the shaft through the propeller; indeed, owing to the fact that the large ship had a greater pitching period than a small ship, the transverse stress would be less than in the case of the small ship owing to the difference in the rapidity of motion of pitching, other things being equal, and the only circumstance under which they could conceive of a greater proportional transverse stress coming on the shafting of the large than upon that of the small ship, would be if the propeller was larger relatively to the propeller in the smaller vessel. It looked to him as if Mr. Caws thought that the propeller was larger than in the smaller ship; but, if so, it was bad design. Indeed, the size of the propeller should be rather less proportionately than in the small vessel, for the speed was a little higher, and therefore, looking at it anyway they liked, they could not show that size of ship affected the stress on the shafting. Indeed, he (Prof. Weighton) should have fancied the bigger the ship the less the stress on the shafting, because it was a steadier ship. He once heard a very respected engineer on the Clyde, at one of the meetings of the Institution of Engineers and Shipbuilders in Scotland, say, when this subject was discussed—it was a very old subject the yielding of screw shafting at sea—"a shaft is like a wire in the midst of a great structure that cannot yield." Now, he did not think that was quite true; but there was a great deal of truth in it. Sometimes it was claimed that the bending and yielding of the ship broke the shaft; well, if the ship yielded so much as to seriously stress the shaft, it was a very bad job for the ship. For these reasons he would beg to dispute the correctness of the proposal that a factor should be introduced in any shafting rules dependent upon the dimensions of the ship.

The discussion was closed.

COMMUNICATIONS ON MESSRS. E. C. CHASTON'S AND F. CAWS'S PAPERS.

GLOUCESTER,
23rd *March*, 1899.

DEAR MR. DUCKITT,

With respect to Mr. Chaston's paper, I should like to make the following remarks. It would appear that the stresses on tail shafts are certain to be very much more severe in proportion to engine power in the case of cargo steamers as compared with passenger vessels, not only because in the former, when light, there is the very severe alternating transverse stress due to the "thrashing of the water" by the propeller partially immersed, but from the fact that the forward thrust, propelling the vessel, acts at a point considerably below the axis of the shaft.

With respect to reaming coupling bolt holes and fitting coupling bolts on board ship, it would appear that this can be in no way an improvement over doing this work in the shop; because it cannot be denied that the lengths of shafting can be at least as carefully and truly fitted together on the floor of the shop as they can in the tunnel. I judge that Mr. Chaston does not maintain that if the line of shaft is not properly laid off in the ship, it can be cured by coupling up the lengths of shaft untruly. It would appear that the right way to deal with the work is to be very careful that the coupling faces of the shaft are mechanically true, to fit the pieces of shaft together truly in the shop; but in order to secure a true shaft line on board there seems to be no doubt that the final adjustment of that shaft line, with heights and transverse positions of plummer blocks, ought to be finally determined when the vessel is afloat by a careful observation that the coupling faces come truly together. My practice is to use four pieces of thin paper put in between the coupling faces successively and the coupling faces brought up, but not bolted up, then if the four pieces of paper all grip it would seem that the truth of the shafting can be pretty well relied upon, and I have found it answer well.

Everyone will agree with Mr. Chaston's severe condemnation of the very inaccurate jig or boring disc for coupling bolt holes which he mentions, and, with deference, I maintain that this matter of the rounding out of coupling bolt holes on the faying surface of the couplings, and worse still the bad fits, go far to explain the trouble with coupling bolts.

With regard to taper coupling bolts, I have always considered that these made a first-rate job, assuming of course, as we have a right to assume, that a good workmanlike fit is made, and if this cannot be relied upon with the taper bolts we are not justified in assuming it with the parallel ones; the only drawback to the practice would seem to be the greater expense. With regard to the detection of a broken bolt, it is clear that a fractured bolt is more likely to be detected in the case of taper bolts than parallel ones, because the broken part is more likely to work out and manifest the state of things.

Referring to bolt No. 4, which replaced bolt No. 3, the diameter of the former would have to be 3½ inches, and not 3¼ as marked, since the large end of bolt No. 3 is 3½ inches, and the hole would of course require to be opened out to the diameter of the large end. This increase of diameter itself is a substantial addition to the strength for shearing, and still more for bending, which is an important point, especially if the bolts do not fit close up to the faying surfaces of the couplings, as shown on Fig. 2 (Plate III.). With reference to this last case, assuming 1,650 I.H.P. as given to be developed at 70 revolutions, and that the mechanical efficiency up to the propeller is 0·85, and a ratio of turning, maximum to mean, only 1·25, the turning effect is 700 ton-inches. Assuming the steel in the shaft to be equal to about 29 tons, the normal factor of safety is about 14; but the bolts shown are not equal to this, even assuming only a shear upon them, and seeing that the bearing pressure on the coupling bolts must be at some little distance from the faying surface of the couplings, there is also a bending stress on the coupling bolts, which, in the couplings shown, may amount to about as much as shearing stress. This is calculated on the basis of a centre of pressure only ⅜ inch from the joint faces of the couplings, so that it is not surprising that the coupling bolts gave trouble in this case, the bolts being rather small and the flange rather thin also.

With regard to the outer bearing on rudder post to support tail shaft, I have always had the idea that this arrangement was certain to result in the tail shaft helping to support the rudder post against blows of sea on the rudder, and one would be inclined to maintain that much the best way would be to devote the expense saved by omitting the outer bearing to make the tail shaft substantially larger in diameter. In any case, if an out-end bearing is desired it ought to be only supported vertically by the rudder post, and not bound horizontally, so that if any vibration or deflection of the rudder post takes place from a blow by the sea the shaft will not be affected; but, for my own part, I should most

decidedly increase the diameter of the tail shaft and do without the outer bearing. In connection with this matter, it would be interesting to have the result of experience in the use of tail shafts of considerably larger diameter in the stern bush, and made plain without any brass casings, the bushes being extra long and of white metal. I have been using this plan for some years now, but only in comparatively small sizes, and shall be very glad to have the opinions of those who have used the same plan in larger sizes and in greater numbers of cases. It has the advantage, with a largely increased diameter or swell in way of bushes, that the shaft can be skimmed up a good many times, and with new bushes the job is as good as new; for in the same outer diameter of stern tube the diameter available for shaft is considerably increased by the omission of the brass casings and less room required for the white metal bush than for brass bush and lignum vitæ strips.

When gun-metal casings are employed, however, I think all engineers will thoroughly agree in Mr. Chaston's recommendation to let the gun-metal casing fit into a recess in fore side of propeller boss and joint this carefully in, so as to avoid contact of sea water. This is a small but very important point that should never be neglected.

Yours faithfully,

W. SISSON.

BARROW-IN-FURNESS,

22nd March, 1899.

DEAR MR. DUCKITT,

It will be impossible for me to be at the meeting to hear Mr. Caws's paper read, but there are some remarks which I would have liked to add to the discussion that is sure to arise on it.

1. With regard to the water cooling of hollow shafts, the cooling could be much more effectively done by water jackets to the bearings. I fail to see that any sufficient pressure would ever be likely to be applied inside the shafting to have any appreciable effect on its rigidity.

2. With regard to his observations on stiffness. Stiffness is a question mainly affecting the tunnel shafting. The ideal tunnel shaft would be flexible. A stiff shaft must load its bearings considerably, and be severely stressed before yielding to the distortion produced by the change of form of ship. This must be a factor of greater importance in the big ship of Mr. Caws's paper than in the little one, as I will endeavour to show. The deflection of ship per foot of length will probably be as

much in the big ship as in the little one, but compare the stiffnesses of shafting in the two. Suppose power of big ship = 3 times that of little ship, also, that the revolutions per minute are the same. Then approximately the diameters of the shafting will be as cube root of 3 is to 1, but their stiffnesses against bending will be as $(\sqrt[3]{3})^4$ (cube root of 3 to the fourth power) is to 1, which reduces to about the ratio 4·33 to 1. So the shaft of the big ship, although more than four times as stiff, has to either yield and be stressed by bending, or load its bearings and let the ship, so to speak, hang upon it, in a ship which probably yields to external causes as much as the little ship with its light comparatively flexible shaft. This question invites treatment with data and dimensions; but, on the face of it, would it not predispose one to avoid the stiffness that Mr. Caws advocates, and to reduce diameters to the minimum required for torsion, while preventing sagging of the shaft due to its own weight by increasing the number of bearings, so decreasing the spans? The above considerations apply mainly to tunnel shafting.

The third section is the consideration of propeller shafting, the chief breakages taking place there. Mr. Caws states a theory involving the "power of the inertia of the ship" to account for the more frequent occurrence of this mishap to the larger ship. I would remind him, in the first place, that these big ships have big shafts, not always forged by hammers proportionately big. But beyond that he has not given us any proof of his theory, nor even any path towards a proof. In the case of a ship tossing up and down, carrying its propeller with it as long as it can, here as everywhere action and reaction are equal and opposite, and will add up so if you can determine them all. Take, then, the reactions of the propeller so far as we know them. There will be (*a*) its weight bending the shaft, the moment depending on the weight and the overhang; there will also be (*b*) the resistance offered to the motion of the propeller up and down through the resisting water, producing a moment depending on size and surface of propeller, on overhang, and one rate of motion; also another (*c*) due to the inertia, or mass of the propeller resisting not motion but change of motion. The amount of (*c*) depends on mass of propeller, on overhang, and on rate of change of motion. Now, the size of ship does affect (*b*) and (*c*). The big ship has a bigger and heavier propeller, but against that has a stronger shaft to carry it, and, an important point that seems to have escaped the attention of Mr. Caws, the big ship moves its propeller more slowly up and down and accelerates and retards it more slowly, so reducing (*b*) and (*c*). Unless Mr. Caws can show us a further reaction, whose nature

is such that the slowness of the big ship is more than counterbalanced, his theory must be held to be for the present unproved. If such a reaction can be discovered and dealt with, Mr. Caws will, even if not its discoverer, be credited with at least a shrewd guess.

Hoping the discussion will be vigorous, and that these remarks may be of some little use.

Yours faithfully,

CHARLES W. CAIRNS.

PENINSULAR AND ORIENTAL STEAM NAVIGATION COMPANY.

OFFICES, 122, LEADENHALL STREET, LONDON, E.C.,

April 5th, 1899.

DEAR MR. DUCKITT,

I duly received the advance copies of Messrs. Chaston's and Caws's papers on screw shafting, and am pleased to see a little more light is to be let into the subject on the North-East Coast.

As Mr. Chaston has quoted extracts from my paper wherein it is stated the strength has been reduced to 6 per cent. above the Board of Trade rules, and as some engineers may accept this unreservedly, I wish it to be quite clear such a small margin should not be worked to only under circumstances where the material is of steel by first-class makers and 60 per cent. stronger than the best shaft iron as shown by fatigue and tensile tests; where the shaft is of ordinary material or iron a much larger margin should be allowed, according to the quality and price paid for it.

With regard to running the gauntlet of Lloyd's surveyors, as they cannot see beyond the outside of the shaft, what is required is more crucial tests of pieces taken from the shaft itself to determine its quality. It is a difficult task in these days of keen competition to get people to adopt first-class shafting, for if a maker was to start and turn out superior shafts he would soon have to close his shop, as at present there is no inducement held out; but if Lloyd's and Board of Trade would lay down proper rules to obtain good shafts, all would then be alike.

Yours faithfully,

WM. MANUEL.

3, NORFOLK STREET, SUNDERLAND,

29th April, 1899.

DEAR MR. DUCKITT,

The various points in these papers having been fully dealt with by various speakers at the last meeting, I will confine my remarks specially to the failure of propeller shafts, and my views as to the remedy thereof.

After an experience of over sixteen years ashore as a consulting and superintendent engineer, and having during that time examined a number of shafts, I am firmly convinced that chemical and galvanic action, producing corrosion at the juncture of the gun-metal liners and the iron or steel shaft, is the primary and inducing cause of nearly all the tail shaft failures.

I think it is pretty well known that corrosion and fractures occur chiefly at three points, viz., at the after end of the after liner, the forward end of the after liner, and the after end of the forward liner, but very seldom—in fact, in my experience, I have not come across a case—has any corrosion or fracture been found at the forward end of the forward liner. This, to my mind, points conclusively to the fact that this end of the liner, being run practically dry, prevents any chemical or galvanic action taking place, and therefore no corrosion or fractures occur at this point; whereas at the other three points, more especially at the inner ends of the liners, inside the stern tube, being constantly subject to the corrosive action of the dead water lying in the bottom of the stern tube, chemical and galvanic action takes place, corrosion ensues, and ultimate fracture of the shaft occurs at one of these points. This applies to nearly all the shafts that fail and to others that have to be condemned as unfit for use. A case some time ago came under my notice where the shaft was reduced $\frac{5}{8}$ inch in diameter at the forward end of the after liner in fifteen months.

Now, the remedy for all this trouble is very simple, because we have only to consider that the forward end of the forward liner causes no trouble, because it runs practically dry, therefore run the other three points under the same conditions, and the difficulty is solved.

To protect the after end of the shaft at the after liner, this end of the liner should in all cases fit into a deep recess in the propeller boss, provision being made to have a small space which can be run up with melted wax or tallow after the propeller is tightened up, thus completely sealing this end.

To deal with the inner ends of the liners I have adopted a special form of stern tube (see Plate VII.) which accomplishes this in a very simple manner; and by reference to the drawing it will be noticed the middle part of the tube is enlarged so as to form a stuffing box and gland, which takes the forward end of the after liner, thus effectually preventing the access of the sea water to the uncovered portion of the shaft, the sides of the tube forward of this gland to the peak bulkhead are left open, thus giving access to the gland for packing, also to the shaft for inspection, cleansing, and painting at any time, and thus doing away with the dead water which lies in solid tubes. The usual stuffing box and gland is fitted at the forward side of the peak bulkhead.

By this simple improvement in the stern tube we have a most effective remedy for tail shaft failures, and still retaining the advantages of the old style of tube, viz., a good stay to the peak bulkhead, and which is very preferable to a short tube, necessitating a stepped bulkhead, or reducing the capacity of the peak tank. This tube has been fitted to a number of steamers trading in all parts, and after four and a half years' use in different vessels the owners report the shafts as perfectly clean and free from corrosion, and have not had as yet to be lined up. I beg to thank the writers of the papers for the opportunity given to discuss such an important question.

Yours faithfully,

J. W. DONOVAN.

NEWCASTLE-UPON-TYNE,

1*st May*, 1899.

DEAR MR. DUCKITT,

When Mr. Caws's paper was read at the meeting on the 24th March I expected it would be subject to discussion upon its own merits, therefore did not include it in my remarks upon Mr. Chaston's paper. Although practically treading the same ground, it deals with the subject in a manner quite its own. But as I am debarred from speaking twice on the same subject, I would like very much to draw attention to several points brought forward in Mr. Caws's paper, which I think deserve more than passing notice, as it is a subject of most vital importance at the present time in connection with the marine engine; and this is put forcibly by Mr. Caws in the opening paragraphs of his paper.

The question of material for shafts is one that can only be settled by actual practice, and I would suggest that if those closely connected with

the manufacture and running of shafting would send to this Institution, from time to time, the result of their experience with the different materials and manner of treatment, it would be most valuable information, and if included in the *Transactions* would tend greatly towards a solution of the question.

The results of corrosion and galvanic action on propeller shafts are well known and appreciated, and it is satisfactory to note that means are being adopted in many cases to prevent this dangerous deterioration by protecting the shafts; and I am sure if means towards this end were more generally adopted, or in fact made compulsory, the result would be still more satisfactory; for undoubtedly the primary cause of the failure of propeller shafts is due to their being unprotected against corrosion and galvanic action. This protection can be given with little cost and trouble, and, if given, I am confident it would treble the life of the shafts. Dispensing with the brass liner and stern bush, and running the shaft in a hard cast iron bush, has not, so far as I can learn, been successful in ocean-going steamers; but I fail to see why this should not be a success, provided the stern bush is kept thoroughly well lubricated. Still, the present well-tried arrangement, under the same circumstances, would place the safety of the shaft beyond a doubt with regard to the deterioration already mentioned, and would be a decided gain in speed of engines.

It would undoubtedly be a step in the right direction if the leviathan ocean tramp was furnished with a fixed ballast load mark It would not only minimise the damage to shafting, but would save thousands of pounds expended on both sides of the Atlantic in re-riveting the hulls of such vessels after a heavy western voyage in ballast. And if this limitation of lightness was made compulsory, any addition to the diameter of shafts for this class of steamer could, I think, be safely dispensed with.

Mr. Caws states that a steel vessel of great length is endowed with a considerable degree of flexibility. To my mind, this flexibility does not exist in such a marked degree as to cause compression and tension throughout the structure to such an extent as to be detrimental to the shafting, except probably in vessels loaded with deadweight cargoes, such as iron and copper ores. In my experience of steamers that have encountered very heavy weather, the indications of flexibility are entirely confined to midships, and is shown by the evident straining of the butts of shell plating, but it is very rare (except in cases of stranding) that the same evidence will be found abaft the engine room bulkhead. I have known cases where the flexibility or vibration of the engine seat,

particularly when the engines were racing, has been detrimental to the shafting; one special case came under my notice where the flexibility of the engine seat played such havoc with the crank and thrust shafts that eventually the engines had to be landed and the seat strengthened, then it ceased from troubling. This particular part of the structure has always been a bone of contention between ship and engine builders, and as a rule has not received the attention in design and care in construction it deserves, which is in many cases demonstrated by the indications of movement in the seating. I would, therefore, bring this broadly to the front as a prolific cause of the failure of crank and thrust shafts.

Mr. Caws very clearly describes in the fifth paragraph from the end of his paper what, in my opinion, is the heaviest punishment to which a steamer's shafting is subjected, and is most severe with the vessel head on to the sea, for the violent pitching and scending suddenly throws the propeller out of water and as suddenly the speed of engines is increased beyond the momentum of the propeller, causing a torsion strain throughout the length of the shafting, and when the propeller is as suddenly submerged, it acts as a brake upon the engines reversing the strain, and this is constantly repeated with undoubted telling effect upon the crank and propeller shafts. I have usually found that the thrust shaft comes next as a sufferer, and in the majority of cases develops a latent longitudinal defect amongst the thrust collars, not in itself dangerous, but eventually it takes a circumferential direction, being weakened by the inherent defect necessitating its being condemned, this is usually called a fracture, but when cut into shows up the smooth, black, dusty face of a lamination, which points to something being wrong in the building up of this part of the shaft to form the thrust collars: this is worthy of the attention of the forge members of the association.

The tendency now to adopt the twin propeller to very large cargo steamers will, undoubtedly, preserve the shafting from the violent punishment just referred to, and this arrangement will, I have no doubt, come to be generally adopted.

I would like very much to see this subject taken up more energetically by the superintendent engineers, either in discussion or in the manner I have suggested at the commencement of this letter, and by that means give the benefit of their very valuable experience which would be of great advantage in arriving at a solution of the question how to avoid the frequent failure of propeller shafts.

Yours faithfully,

DAVID ANDREW.

BALTIC CHAMBERS,
NEWCASTLE-UPON-TYNE,
May 6th, 1899.

DEAR MR. DUCKITT,

I regret I was prevented from attending the reading of the two papers on shafting, likewise the first discussion on the same; and at the meeting held on Wednesday, May 3rd, as there seemed a strong desire on the part of some to hear Mr. Cowens's paper read, I refrained from making any remarks. I have read Messrs. Chaston and Caws's papers, and also the various able speeches that have been made on them. Some of the speakers have expressed my opinions in a manner, but, I think, not wholly.

I will just touch slightly on the minor subjects before coming to the most important item, not only of the papers, but also of marine engineering of the present day.

I most emphatically say that coupling bolts would never be properly, economically, or so well fitted into tunnel shafting in new work when on board the ship as in a properly constituted shop for the doing of this work. A good job can be made with tapered bolts, but parallel ones, in my opinion, are much better and safer, less liable to turn slack, and more easily and economically fitted. I certainly think that tunnel shafts if above 16 feet long should have two bearings to each length of shafting, and also that the length of the thrust shaft should be only long enough to just clearly go through the bulkhead, and should in all cases have an independent bearing clear from the thrust seating.

I agree with Mr. Chaston in his assertion that in many cases the tunnel seats are not sufficiently stayed, either athwart or fore and aft, more especially where the shafting is more than 3 feet from the tank top.

As the plummer block keeps are never a tight fit, the shaft has the elasticity that some think necessary, to prevent it from breaking; but tunnel shafts rarely break, in fact, I have only heard of about four during the last twenty years; and as 75 out of the 89 Mr. Milton mentioned were screw shafts, I do not suppose there was more than one tunnel shaft all last year—perhaps Mr. Milton will verify this—so I think we have no cause for anxiety on that head, although, in my opinion, 99 out of every 100 vessels built sag in the middle when fully loaded, especially with heavy cargoes, such as iron or other ores.

I will now try to give my opinion of tail shafts and their breakages. In the first place, from the experience in the vessels I have had under my inspection, also the many other shafts I have seen and heard of, there are a number of reasons for tail shafts breaking, but no tabulated list of breakages from different causes would be trustworthy for such an important matter as this; and if all the thousands of pounds spent on repairs and renewals, salvages, etc., brought about by the 75 broken tail shafts mentioned by Mr. Milton, had been expended on the manufacture of these shafts as a first cost, they might almost have been made of silver, instead of iron, steel, nickel steel, ingot or compressed steel.

The light ship running across the Atlantic and Mediterranean with the propeller little more than half immersed is, in my opinion, a very great mistake, and no vessel should be passed by Lloyd's that, in water ballast alone, does not wholly immerse the propeller or within a foot of the same, as the hammering of the propeller on the water after a "pitch" by the vessel is, in my opinion, the cause of most of the genuine fractures: there are also many fractures which it might be difficult to prove had *not* been caused by such and such grounding, heavy weather, or quay wall, which, in my opinion, were due to galvanic action, and not to corrosion or accident. I may also say that no good is done by bevelling the ends of the liners, as one liner affects the shaft as much as another, so from this I infer the material of which the liners are often made is not what it ought to be. I also think that the material of the shafts is not what it should be, as there is no perfect method I have ever seen in operation for separating iron from steel scrap, and therefore once get them mixed in a tail shaft, and that shaft is bound not to be good, as the heat to weld steel is different from that of iron. I saw a shaft a little while ago which had been running for about fifteen months, the ends of the liners were bevelled for 1 inch in length down to about $\frac{3}{16}$ inch thick; in between the shaft had been very carefully lapped with canvas, anti-corrosive paint and marlin on the top, which, when removed and cleaned, showed the shaft as bright as if new from the shop, with the exception of several blotches all round and extending the whole distance of the space between the liners, being about 1 inch to $1\frac{1}{2}$ inches in diameter, and about $\frac{1}{16}$ inch deep, and pitched roughly about 6 inches or 9 inches apart; this was peculiar enough, as the body of the shaft between the blotches was quite bright, but on minutely examining the ends of the liners, the shaft also showed some little corrosive-looking marks, so the ends of the liners

were cut off about $\frac{3}{8}$ inch; there was then found a continuous circumferential line of cut into the shaft about $\frac{3}{32}$ inch deep, at the worst, at the inner ends of both liners. The state of the shaft showed there had been no water in direct contact with it, there had been no accident, no heavy weather with light ship, the shafting was in line, and therefore there was nothing else but galvanic action to blame for this, and no doubt in many other cases the cause is the same.

My remedies are: Make shafts of iron or steel, but be sure they have not both in their composition. Do away with brass liners, make tail shafts the diameter of the liners throughout, and lubricate as below. In new vessels fit the stern tube with short brass bushes and glands at each end, and fill it with vaseline and oil between the bushes, and lubricate the bushes with a vulcan or similar machine worked off the shaft in the tunnel. Make tail shaft and stern tube about two-thirds of the usual length.

In conclusion, I thank Mr. Chaston for starting this valuable discussion, and the many who have so ably discussed it.

Yours faithfully,

H. B. BUCKLAND.

SHOP AND GENERAL ESTABLISHMENT CHARGES IN ENGINEERING WORKS AND THEIR RELATION TO COSTS AND ESTIMATES.

By W. E. COWENS.

[Read before the Institution, in Newcastle-upon-Tyne, on May 3rd, 1899.]

In all engineering works the cost incurred in producing any article may be divided into three classes :—

(1) The direct cost of the work.
(2) The indirect cost incurred through shop charges.
(3) The indirect cost incurred through the establishment charges.

Practice seems to vary so considerably in the manner of dealing with these charges, particularly Nos. 2 and 3, that the writer ventures to think the subject sufficiently interesting to bring before the members of this Institution with a view of obtaining some useful discussion on the subject.

The direct cost includes wages, material and all expenses which can be charged against the order number and debited direct against the work.

The shop charges embrace foreman's wages and such portion of the despatch clerk, tool fettler, beltman and labourers' wages that cannot be charged direct to order numbers, engine power, oil, waste, files, hammers, chisels, fuel, etc. These items can all be carefully taken out for each shop, but cannot be charged against order numbers.

The establishment charges embrace all expenditure which is common to the whole works, but which cannot be charged directly to one shop nor to any particular order. They embrace rent, rates, taxes, salaries of the staff, cartage and haulage, interest, insurance, heating, lighting, advertising, expenses of travellers and of branch offices.

With the object of illustrating the method of dealing with these charges we will assume that the works we have selected are of a modern type, and are divided into the following departments :—

(1) Fitting and smiths.
(2) Boiler yard.
(3) Metal foundry.

We will assume that the boilers are centralised and placed under the control of the fitting shop department and that they drive the engines for the whole of the departments, and also an hydraulic pumping engine for supplying the hydraulic power for the riveters, cranes, and hoists throughout the works.

The cost of the boilers must be apportioned to the various departments in proportion to the power supplied. The supplying department, however, must not be allowed to make any profit from the other departments for power supply. Power being itself a shop charge, and the supplying department being merely selected for convenience.

And whilst touching upon inter-departmental costs, it is the rule generally to treat another department in the same way that you would treat an outside customer. One department tendering for work, part of which will have to be made in one or more of the other departments, obtains prices from these departments for their portion of the work, and this price must be adhered to if the order is obtained, even if it results in a loss to the department. It is also customary to obtain prices occasionally from outside firms in order to keep the departments fully up to date. On repair work or orders given without quotations, departments make up the cost with full shop and establishment charges and 5 per cent. profit.

Table I. shows how the boiler cost is arrived at, and its apportionment to the various departments. The writer would call special attention to the items under wear and tear and depreciation, and also in Tables II., III., IV., and V. to the item for interest on outlay.

The prime object of every engineering works is to make dividends; no matter how great an engineering success a works may attain, if they cannot earn some return for the capital invested, sooner or later they will close, and the sooner the better so far as other works are concerned, as they only tend to reduce prices and make other works equally unremunerative. The item for depreciation will be readily understood: a machine will not last for ever, it will gradually wear out, and some allowance must be made to replace it out of revenue in order to keep the works fully efficient. In this paper the percentages have been taken as 7 per cent. for boilers, 3 per cent. for engines, and 5 per cent. for machine tools.

In order that the full work may be obtained from the machine, it must be kept in thorough working order during the whole period of its existence; this is covered under the heading of wear and tear and is taken at 3 per cent. in this paper.

The item for interest on the outlay is possibly not so clear, and the writer trusts we may hear some other opinions on this matter. In most engineering works, however, we have debenture shares bearing a fixed rate of interest which must be paid before the ordinary shareholders get any dividend, and it is principally on this account that the writer maintains that this interest on outlay should be added not as a profit but as an actual item of cost.

Table II. shows the method of obtaining the engine cost, and as an overhead traveller is a necessity it is assumed that there is one in this case, and its cost is shown in Table III.

Having shown how the boiler and engine costs are taken out, we are now in a position to fix our shop charges. The establishment charges are taken out in the accountant's office and apportioned to each department in accordance with the sales. Stocks and work in progress being also taken into account.

The shop and establishment charges are now totalled and the wages of each department taken out, care being taken to see that wages debited to shop charges are deducted. It is now seen what percentage these charges form of the wages, and this percentage is added to cover them to all costs and estimates.

The system of taking these charges as a percentage upon direct wages only is, as a rule, in the writer's opinion, the most accurate way of dealing with them. The cost of materials may fluctuate considerably, and very rapidly, and would necessitate a constant change in the percentage. The percentage taken is of course only an estimate, and as such requires constant revision if accurate cost is to be obtained. At one time the charges may be very high owing to the scarcity of work and possibly short time, whereas at another period, owing to the great influx of work and possibly a double shift, they may be low. Direct wages seem, therefore, the best medium for our purpose.

In a works somewhat similar to those described, the charges run out approximately as under:—

	Per Cent.
Fitters and labourers...	65
Outside erecting	30
Apprentices	100
Smiths and strikers	85
Apprentices	120
Boiler smiths and labourers	75
Men at fires	85
Apprentices	100
Patternmakers	30
Apprentices	60

The increase in the smiths' shop is due to the cost of fuel and the use of the steam hammers.

In the boiler yard the extra percentage is added to cover the cost of the use of tools. It is almost impossible to charge the machines against the orders owing to the intermittent nature of the work. The value of the machines used was therefore taken out in a similar way to the engine cost (Table II.) and added to the shop charges. In addition to this the furnace is charged at 10s. per day.

In the machine shop each machine is numbered, and taken out separately to ascertain its day cost as shown in Tables IV. and V. A heavy lathe and light drilling machine being selected as examples. The tools, belts, and stores were taken out for twelve months, and the tool fettler and beltman's time (entered to shop charges) added, this was divided by the horse-power of the machines, and amounted to about £5 per horse-power per annum, at which charge it is taken in the estimate. By this method a good many of the shop charges are at once charged direct with the machine. In estimating it is not possible to take out each separate machine in the above way, and an overhead rate is fixed of so much per day: this rate varies according to the nature of the work and the type of machine likely to be used. Sometimes a heavy machine may be at liberty, and the light machine, which has been estimated to do the work, be fully occupied; in such a case, rather than let the large machine stand idle, it is usual to put the work into it and charge it at the cost of the light machine, a note being added to this effect, so that a fair check can be kept between cost and estimate.

General Foundry.—This department forms one of the exceptions to the general rule already mentioned, and instead of shop and establishment charges being apportioned against labour they are taken on the tonnage output of clean castings. The shop charges form a large variety of items, and include foreman's wages, coke cinders, limestone, fire-bricks, fire-clay, common yellow clay, blacking, coal-dust, hair, grease, brushes, sieves, pails, stores, chaplets, core iron, straw ropes, loam, sand, steam and hydraulic power, craneman, slinger, foundry smith, cupolas, etc.

Generally, the work may be divided into loam and sand castings, the former almost exclusively use the stoves, and a separate heading should be put in the estimate for them. They are estimated usually to cost 10s. per ton. The metal can be charged direct, and also the loss in remelting generally taken at 7½ per cent.

The output should approximately be one ton per week for each moulder employed and apprentices beyond their first year at two-thirds

the output of a man. Taken upon this basis, the charges work out approximately £2 per ton of cleaned castings.

Our estimate form for loam castings would therefore be as under :—

	Per Ton. £ s. d.
Metal	
Waste, 7½ per cent.	
Stoves	
Moulding	
Labourage	
Cleaning...	
Charges	
Patterns (if any)	
Total net cost per ton ...	

The form for sand castings would be the same, but the item for stoves reduced or omitted, according to the nature of the work. Thus in heavy core work, although the moulds would be dry sand, the cores would be loam, and an allowance would be required for them. In small sand work the small cores are covered by the charges, and the item for stoves may be omitted.

The cupola returns should show weekly the output of cleaned castings, the cost per ton of labourage and skilled labour, the waste and left metal, and coke used per ton of metal melted, so that with foundry costs taken out on this system a very fair weekly check can be obtained.

The pattern shop is taken in with the foundry, the workman's time and frequently the timber also is charged direct against order numbers. It is doubtful whether the trouble in the latter case is commensurate with the gain. It is probably better to charge all the timber directly against the shop, and apportion it as one of the charges. The shop charges consist of foreman's, machinist's and labourers' wages, engine power, use of machines, glue, varnish, nails, chaplets, screws, sand-paper, etc.

In all works it is of the utmost importance that the engineering staff should have a fair knowledge of the methods adopted by the commercial staff, so as to be able to appreciate the difference any improvement or new method of getting out work will have on that system, and all responsible managers of departments should be kept informed as to the charges debited against their department. Where this is not done there is too frequently an idea that the charges are in themselves a profit, and they work accordingly.

With regard also to dividing a works into departments, in the writer's opinion, this is always desirable, as the books show at once which are profitable and which are conducted at a loss.

In conclusion, the writer wishes it to be understood that this paper is written solely from the works manager's standpoint and not from that of the accountant, and that it is intended rather to be suggestive than conclusive.

TABLE I.—BOILER COST AND ITS APPORTIONMENT.

Value of 2 Lancashire boilers with seatings, mountings, and all pipe connections as per plant book, £1,600.

	£
Depreciation, 7 per cent.	112
Wear and tear, 3 per cent.	48
Water, at 6d. per 1,000 gallons	60
Coal, at 7s. 6d. per ton	820
Engineman's and fireman's wages, including Sunday cleaning	100
	£1,140

The boilers drive:—

	Horse-power.	£
Fitting shop engine	90 ...	= 360
Hydraulic pumping engine	65 ...	= 260
Boiler-yard engine	70 ...	= 280
Foundry engine	65 ...	= 260
	290 ...	£1,160

TABLE II.—FITTING SHOP ENGINE.

Value taken from plant book, including shafting, £1,850.

	£	s.
Interest on outlay, 5 per cent.	92	10
Depreciation, 3 per cent. ... ... } Wear and tear, 3 per cent. ... ... }	111	0
Oil and stores	21	0
Boiler cost	360	0
Portion of attendant's time	40	0
65 per cent. charges	26	0
	£650	10

$$\frac{£650}{90 \text{ horse-power}} = £7\ 5s. \text{ per horse-power per annum.}$$

TABLE III.—OVERHEAD TRAVELLING CRANE.

Cost from plant book, including crane girders and rails, £900.

	£	s.
Interest on outlay, 5 per cent	45	0
Depreciation, 3 per cent.	27	0
Wear and tear, 3 per cent.	27	0
Oil and stores	5	0
Engine power, 5 horse-power at £7 5s.	36	5
Man's time	65	0
65 per cent. charges	42	5
	£247	10

Say, £250 per annum. Half of this is apportioned to general shop charges, half to the machines served by the crane. Horse-power of machines served by the crane, 50. Then $\frac{125}{50}$ = £2 10s. per horse-power per annum.

TABLE IV.—LATHE, NO. 28.

Horse-power, 9. Value as standing in plant book, £850.

	£	s.
Interest on outlay, 5 per cent.	42	10
Depreciation, 5 per cent.	42	10
Wear and tear, 3 per cent.	25	10
Tools, belts, and stores, 9 horse-power at £5 ...	45	0
Engine power, 9 horse-power at £7 5s.	65	5
Cranage, 9 horse-power at £2 10s.	22	10
Latheman's time, say	90	0
65 per cent. charges	58	10
	£391	15

Then assuming 300 working days in the year, $\frac{390}{300}$ = say 26s. per day.

TABLE V.—NO. 8 MACHINE.

Six feet radial drill. Horse-power, 3. Value from plant book, £200.

	£	s.	d.
Interest, 5 per cent.	10	0	0
Depreciation, 5 per cent....	10	0	0
Wear and tear, 3 per cent.	6	0	0
Tools, belts, and stores	15	0	0
Engine power	21	15	0
Cranage	7	10	0
Man's time	52	10	0
Charges, 65 per cent.	34	2	6
	£156	17	6

Say $\frac{£156}{300}$ = say 10s. 6d. per day.

DISCUSSION.

Mr. HENRY FOWNES, in opening the discussion, said, keeping the correct cost of work in all manufacturing concerns was a very important matter, and so far as he could see, from his own business, the want of it was one of the evils they had to suffer from, because they had to deal with competitors who did not know the various costs of the various classes of their manufactures. Some of them, who had taken a lot of trouble to get up systems of cost, found themselves cut out in many respects by competitors who did not know the proper value of their work, at one time cutting too low and occasionally going too high. For many years he (Mr. Fownes) sat at the feet of Gamaliel—in the shape of a partner of their President—and he referred to him with great respect, for he taught him a great deal, in fact, all he knew as to the real and correct way of keeping costs of work. Many of the practical elements of a manufacturing concern were apt to run away with the idea that

the cost of the iron, coal, and labour constituted the cost of the job, and they were surprised at the end of the year, when they came to make up their books, to find they had not made anything like the profit they expected, because there was an immense number of items, in the shape of charges, which they had failed to take into account; although there was no doubt such cases were becoming far rarer than they used to be. He quite agreed with Mr. Cowens that the direct wages were the best means of wiping off the charges by charging a percentage thereon. He did not at all believe in the idea or system some people had of charging a value per hour or per day on the cost of any particular machine used on a certain job; this certainly showed a profit on the use of a machine at the end of the year, but it probably showed a loss on the work done, if it was of a competitive nature. It was all very well in a repair shop, where it was mostly time and stuff, to charge a lathe at a pound a day or whatever it might be valued at, but this would not work in a shop which was wholly occupied in work for a competitive market; in his own business certainly there was no chance whatever for this sort of thing, as everything was cut down to the lowest possible item; the only legitimate and true way was to charge a percentage on the direct wages paid. As he said before, he considered that the system of cost he learned from his esteemed friend was the very best system he had ever come across, and although not much of an accountant, he had some experience of keeping books and costs of work, and was therefore in a position to judge. Mr. Cowens mentioned, particularly in foundry work, certain figures which, to those who were in that trade and had foundries, were certainly very interesting, and not only that, but useful for comparison. He quite agreed, as Mr. Cowens said, it was of the utmost importance that the engineering staff should have a fair knowledge of the methods adopted by the commercial staff; and in reference to the discussion on Mr. Westgarth's paper on the laying out of work, this question rather cropped up in the idea of being able to know the cost of the job as it went along, and in the particular system which he (Mr. Fownes) advocated, he was able to tell week by week or even day by day how much the job was costing, and what chance there was of making or losing money at the end of it.

Mr. G. F. Mulherion said the reading of this paper had been an interesting departure to people in his own line. They had had a great many technical papers, some very interesting; but each to his own sphere, and those papers which interested one sometimes did not interest another.

He thought, with due respect to Mr. Cowens, that he had got hold of rather the narrow end of the stick. Undoubtedly, where a works had a miscellaneous output, the detailed cost of separate machines should be kept; but he thought the province of a works manager ended when he had given the total money that would have to be paid in wages, the total quantities of materials, and the total time that would probably be used by the various machines. After that, with all respect, it became a commercial question entirely. There were theoretical values they could estimate for all sorts of articles; but, unfortunately, they were not always realised. One thing that struck him in this paper was that in most of the machines the writer gave "interest on outlay," but in the case of the boiler he did not do so, because, he said, that should not make a profit. There he differed from Mr. Cowens. Get a boiler worth so much, supplying three engines costing so much each, it was just the same as though they got three separate gas engines and did away with their boiler. Therefore, he held, interest should be charged on the boiler, because it was an integral part of the engine, and without which no steam engine was of use.

Mr. Cowens raised another most important question, the question of depreciation, and that seemed to him one of the things public companies juggled with. Some were blessed with very wise directors, who faced the problem, and saw depreciation was a necessary part of the expenditure of a place, and if their balance sheet at the end of the year did not show some amount for depreciation, they acknowledged they had suffered a corresponding loss. Most of them had perused the reports of a number of companies, and seen that frequently the larger the company the more it seemed to juggle with this matter. If they made a profit they would sometimes write off depreciation; if they did not, they would say nothing about it. It seemed to him that directors should have an inviolable law as to the percentage to be deducted annually for depreciation, and if they had made a loss they had made it in addition to the depreciation. Where works went on year after year, never deducting anything in the name of depreciation, it was not to be wondered at that there followed so often a reduction of capital. It was not fair. This depreciation should be faced year by year, and he held that depreciation was as much a part of their cost as anything else they could mention. The individual who did not face it was blinding himself, and for that reason he was pleased to see this item was regarded.

the cost of the iron, coal, and labour constituted the cost of the job, and they were surprised at the end of the year, when they came to make up their books, to find they had not made anything like the profit they expected, because there was an immense number of items, in the shape of charges, which they had failed to take into account; although there was no doubt such cases were becoming far rarer than they used to be. He quite agreed with Mr. Cowens that the direct wages were the best means of wiping off the charges by charging a percentage thereon. He did not at all believe in the idea or system some people had of charging a value per hour or per day on the cost of any particular machine used on a certain job; this certainly showed a profit on the use of a machine at the end of the year, but it probably showed a loss on the work done, if it was of a competitive nature. It was all very well in a repair shop, where it was mostly time and stuff, to charge a lathe at a pound a day or whatever it might be valued at, but this would not work in a shop which was wholly occupied in work for a competitive market; in his own business certainly there was no chance whatever for this sort of thing, as everything was cut down to the lowest possible item; the only legitimate and true way was to charge a percentage on the direct wages paid. As he said before, he considered that the system of cost he learned from his esteemed friend was the very best system he had ever come across, and although not much of an accountant, he had some experience of keeping books and costs of work, and was therefore in a position to judge. Mr. Cowens mentioned, particularly in foundry work, certain figures which, to those who were in that trade and had foundries, were certainly very interesting, and not only that, but useful for comparison. He quite agreed, as Mr. Cowens said, it was of the utmost importance that the engineering staff should have a fair knowledge of the methods adopted by the commercial staff; and in reference to the discussion on Mr. Westgarth's paper on the laying out of work, this question rather cropped up in the idea of being able to know the cost of the job as it went along, and in the particular system which he (Mr. Fownes) advocated, he was able to tell week by week or even day by day how much the job was costing, and what chance there was of making or losing money at the end of it.

Mr. G. F. MULHERION said the reading of this paper had been an interesting departure to people in his own line. They had had a great many technical papers, some very interesting; but each to his own sphere, and those papers which interested one sometimes did not interest another.

He thought, with due respect to Mr. Cowens, that he had got hold of rather the narrow end of the stick. Undoubtedly, where a works had a miscellaneous output, the detailed cost of separate machines should be kept; but he thought the province of a works manager ended when he had given the total money that would have to be paid in wages, the total quantities of materials, and the total time that would probably be used by the various machines. After that, with all respect, it became a commercial question entirely. There were theoretical values they could estimate for all sorts of articles; but, unfortunately, they were not always realised. One thing that struck him in this paper was that in most of the machines the writer gave "interest on outlay," but in the case of the boiler he did not do so, because, he said, that should not make a profit. There he differed from Mr. Cowens. Get a boiler worth so much, supplying three engines costing so much each, it was just the same as though they got three separate gas engines and did away with their boiler. Therefore, he held, interest should be charged on the boiler, because it was an integral part of the engine, and without which no steam engine was of use.

Mr. Cowens raised another most important question, the question of depreciation, and that seemed to him one of the things public companies juggled with. Some were blessed with very wise directors, who faced the problem, and saw depreciation was a necessary part of the expenditure of a place, and if their balance sheet at the end of the year did not show some amount for depreciation, they acknowledged they had suffered a corresponding loss. Most of them had perused the reports of a number of companies, and seen that frequently the larger the company the more it seemed to juggle with this matter. If they made a profit they would sometimes write off depreciation; if they did not, they would say nothing about it. It seemed to him that directors should have an inviolable law as to the percentage to be deducted annually for depreciation, and if they had made a loss they had made it in addition to the depreciation. Where works went on year after year, never deducting anything in the name of depreciation, it was not to be wondered at that there followed so often a reduction of capital. It was not fair. This depreciation should be faced year by year, and he held that depreciation was as much a part of their cost as anything else they could mention. The individual who did not face it was blinding himself, and for that reason he was pleased to see this item was regarded.

Mr. C. J. SEAMAN said that this was a paper which would be more useful if discussed thoroughly than might at first sight appear. The main difficulty he saw in connection with it was that it laid down a system which, he had no doubt whatever, was perfectly in order in the particular case from which the experience was drawn; but which, he was afraid, if many of them were to take and use in their own works, would lead them hopelessly wrong. Let him give one example of that. Take the question of foundry costs on page 224. The suggestion was that the establishment and shop charges were not to be apportioned against wages, but placed upon the tonnage output of clean castings. In works where they had a considerable variation in the class of castings made, they might be in a very serious position at the end of the year, for in awkward, intricate castings, where the amount of labour was excessive, the proportion of shop charges would require to be considerably higher on the tonnage rate than in the case of plain bedplates, for instance. He would suggest that they would find, in the general rule, a much greater advantage if they had two rates, one the tonnage rate and one a labour charge. That was, they took, say, shop and establishment charges and said, "now we apportion these in making out our cost into two items, one a percentage on labour and one a percentage on weight." He knew he had a case in which there was considerable difficulty until he subdivided the costs in that way, and then only got at the end of the year the reliable figures he wanted to attain to. The last speaker referred to the question of works manager and where his duty ended, which might be all in order in the case of a works manager pure and simple; but he thought the writer "hit the nail on the head" when he referred to the importance of the commercial staff and engineering staff working together in this matter. It was so rarely they could get a commercial man to follow the differences which might materially affect his costs, and he might be wonderfully surprised when he found the difference at the end of the year. They could hardly well hit upon any system of costs any more than they could postulate upon a particular ratio of charges which would fit in different shops. They would have to take their basis for their particular works before they could get the costs to balance accurately with the balance sheet. Generally, this paper was all right; but if they came to detail, the chances were it would not lead them very correctly. The question of depreciation was mentioned, and that was a very important one, and he thought it was one of the most valuable things in the paper that it should be treated absolutely as a question of cost; that a certain

amount for depreciation should be put on each tender, and he thought so for another reason besides the intrinsic value of it, because by so doing they got a larger amount for depreciation when their works were fully occupied and works could afford best to put aside something for depreciation. If they could establish that custom he was sure the paper would have served a very good purpose. He was personally pleased to have heard it, and thanked the writer for it.

The PRESIDENT said he would make one or two remarks: one was as regarded the relative question of charging a general rate on wages to cover working charges, or putting in the time of each machine, charged at a special rate. He had been connected with works that had done both one and the other. His own feeling was that they must, to a great extent, adopt a system suited to the individual works. Of course, if they simply charged 65 per cent. on time for all their inside engineers—which, if he read Mr. Cowens's paper correctly, was what he proposed to do—if it was right for men working at vices, it was wrong for men working on wall planing machines. If they were always turning out a similar class of work there was the same ratio every day the machine worked, and they could charge an average rate over the whole quantity. In fact, in a works, where they turned out one style of work, it was much easier than where a great variety of work was carried on in the same shop. It was often of much service if anyone interested in keeping charges such as these would in their spare time work it out on some system other than their regular one, and see how it compared. If they had a certain price per article, find out the cost on the machine, charge a certain amount for labour, and see how it came out compared with this system named by Mr. Cowens—30 per cent. for outside labour and 65 per cent. for inside. As regarded depreciation, it was quite clear that people ought, whether they made or lost money, to charge an absolute fixed rate of depreciation on each class of work—so much on machinery, so much on buildings, and so much on something else. With regard to some articles, such as steel tools, they could be weighed up every year; and they should have stocktaking instead of depreciation. Depreciation, as a matter of fact, was probably different in every works from other works. Some people would not keep their works in the same order as others; they kept their machines in very bad order, so that they wore out at a great pace. Therefore, while right to have a system of depreciation, he thought it was also a good plan, every ten or twelve years if possible, to have the works revalued by

an independent outsider as a sort of check, to see if they were keeping up a fair figure as the value for their works, for remember, they had no more right to put their works at less than they were worth than they had to put them in at more than they were worth. Some people thought it all right if they kept on the safe side; but there was no safe side except that of accuracy. If they wrote too little depreciation off the shareholders had too high a valuation: if they took off too much the shareholders would undervalue the shares, and might sell them at a depreciated value, and so do themselves an injury, which was not fair to them. If they put too much to depreciation, and paid 4 per cent. dividend instead of 5 per cent., people might sell their shares as depreciated, and shares would have changed hands at an unfair value. The best way to keep right was to write off depreciation on previously decided rules, which should be just the same whether there was profit or loss on their working, and every ten years have their works revalued. The writer of the paper took all his charges on labour; but another way was to take working charges on the whole cost of work. For example, there was £100 of work, material cost £50, labour £33, and £17 for working charges. That might be made up in two ways, either charge on labour only, as done here, or they might take the shop charges of labour, and take the whole charges, taxes, etc., on the finished article. That covered the cost of getting in and out. For example, as he supposed all engineers did sometimes, they bought an article ready made, it was brought to their works, packed up and sent out to some foreign country. Well, the labour on that was infinitesimal, but they ran a certain risk of losing money, for they might have made a bad debt on it; so they might charge, say, 5 per cent., or any other figure, on the finished article, as a mercantile transaction of what they bought and sold; for they were not only manufacturers, but merchants. If they were not the manufacturers at all they would have to charge a commission, or some charge to cover their office expenses. In so far as he happened to be a merchant and not a manufacturer, in so far as he bought and sold an article on which he did not do any work, he had his merchant's charges to consider. In fact, what they had to do, whether they called it workshop charges, or labour charges, was to put a small percentage on the whole article to cover office expenses. It was an interesting paper, and to see how people made out their different charges was well worth studying.

The discussion was adjourned and the meeting dissolved.

NORTH-EAST COAST INSTITUTION OF ENGINEERS AND SHIPBUILDERS.

FIFTEENTH SESSION, 1898-99.

PROCEEDINGS.

CLOSING BUSINESS MEETING OF THE SESSION, HELD IN THE LECTURE HALL OF THE LITERARY AND PHILOSOPHICAL SOCIETY, NEWCASTLE-UPON-TYNE, ON FRIDAY EVENING, MAY 12TH, 1899.

SIR BENJAMIN CHAPMAN BROWNE, D.C.L., J.P., PRESIDENT, IN THE CHAIR.

The SECRETARY read the minutes of the last General Meeting, held in Newcastle-upon-Tyne, on May 3rd, 1899, which were approved by the members present, and signed by the President.

The ballot for new members having been taken, the President appointed Messrs. Wm. Stafford and John K. Sinton to examine the voting papers, and the following gentlemen were declared elected :—

MEMBERS.

Armstrong, Walter, Ship Draughtsman, 14, Elwin Terrace, Sunderland.
Brown, Percy J., Engineer, Salem Cottage, Sunderland.
Dobson, John T., Ship Draughtsman, 3, East Street, Sunderland.
Fettes, James, Engineer, c/o Messrs. R. E. Mudie & Sons, Maritime Buildings East, Dock Street, Dundee.
Muir, Chas. Matthew, Ship Draughtsman, 39, Forster Street, Sunderland.
Paxton, John F., Draughtsman, 52, Walker Terrace North, Gateshead-on-Tyne.
Tweedy, Geo. F., Engineer, Kelso House, Newcastle-upon-Tyne.
Urquhart, Douglas M., Ship Draughtsman, 16, Forster Street, Sunderland.

GRADUATE TO MEMBER.

Short, Thomas Smart, Shipbuilder, Messrs. Short Bros., Pallion, Sunderland.

ASSOCIATE.

Geary, William, Marine Superintendent, Parkside, St. Aidan's Road, South Shields.

his remarks upon the reaming of holes afloat, and said, "In the shop they could, if they liked," etc. (see page 181). But did they like, and were reasonable pains taken? Was the time spent and proper attention given to the adjustment of couplings previous to boring the holes, and did the machineman know the true value of watching the various points which had tendencies to throw the centre line out? He might say this: with high cutting speeds, and a shaft finished with the same centres with which it was roughed out (he did not mean the lathe centre, but the centres in the shaft), there was a possibility of the faces of the couplings not being at right angles to the centre line of the shaft. This had been proved over and over again in the building of crank shafts; and, to guard against this, crank shafts had a finishing cut taken over all the journals after the three cranks were coupled together, and the after couplings of the same were finally faced down. In advocating the fitting of shafts together in the shop, Mr. Milton was assuming that the shaft was dead true and all couplings were of one exact diameter. It was through neglect on these points that the lateral or transverse centre line got astray; whereas in the ship, where the shaft was placed in the bearings and coupled with service bolts, a happy mean of these errors was found, and then the holes were reamed, with the result of a practically dead true lateral centre line, consequently the shaft ran in a true circle. He was sorry Mr. Milton did not express his opinion on the value of having a standard mixture for brass liners. The value of this important detail seemed to have been lost sight of in the discussion. In reference to mixtures for liners, he had brought for their inspection a strip cut from a liner last week. They would see the strip was the entire length of the liner. This was a sample of a liner which was put on to a tail shaft in December, 1896, and put on board a vessel as spare gear. On May 4th, 1899, this spare shaft was wanted, and consequently brought out of 'tween decks with a view to fitting it into place. When the ship's superintendent saw the state of the liner, he ordered the shaft into the lathe to reduce its diameter a sixteenth, to see if the sponginess and dirt were only surface defects. The results of machining was now before them. The superintendent, in the presence of a Lloyd's and an underwriters' surveyors, ordered the liner to be cut off, and a new liner put on, at the expense of the owner, which was £50 dead loss to him (the owner). This shaft had never done a day's work, and the value of good liners in this case appeared to have been lost sight of, otherwise the shaft would not have found its way on board of the ship. Presuming that the shaft with this liner had been fitted

MR. EDWARD C. CHASTON'S REPLY TO THE DISCUSSION ON HIS PAPER ON "NOTES ON THE MANUFACTURE OF SHAFTING FOR SCREW STEAMERS, WITH SOME CAUSES OF DEFECTS AND FAILURES."

Mr. CHASTON, in reply to the discussion on his paper, said Mr. Andrew was inclined to think that in many cases the supervision ended with the trial trip, and said "If the same supervision was carried on during the time it was running as was done during the time of manufacture, there would be less damaged shafting." He did not quite follow him. Did Mr. Andrew mean to infer that the shafting on board of the ship was neglected by the engineer or superintendent? Mr. Andrew appeared to have mixed the vertical centre line with the lateral. In his (Mr. Chaston's) paper it was clearly pointed out that the lateral or transvere centre line only was being dealt with. Mr. Andrew also commented on the bad state of affairs at the end of fourteen months in relation to Fig. 1. (Plate III.) and suggested the bearings had been hot. But he might tell him that the bearings, which were cast iron filled with white metal, were in first-class condition, as well as the journal itself, and there was not the slightest trace of heating. Mr. Andrew might wonder how this was not detected before. Well, the vessel had only completed her second voyage, and when the engineers stripped the shaft the position in which they had the crank showed a splendid journal, but on the under side the tool marks were not out of it. His remarks about the coupling bolts required no comment, as the bolts were there for inspection and spoke for themselves. These were supplied by three different engine builders, and it could easily be seen some had originally been of first-class workmanship.

As to Mr. Sisson's remarks, he did not wish to say that lengths of shafting could not be truly fitted together in the shop, provided there was a true plane or table long enough to take two entire lengths of shafting. He knew firms whose method was to have the two couplings, when being bored, resting on the machine table, and the two extreme ends packed up with wooden chocks, etc. This method had some ugly features, which he need not detail. He visited recently two first-class engine shops on the North-East Coast. Both firms had different methods in boring and coupling shafting in the shop complete. In both cases the

couplings were diametrically out of truth, and he drew both managers attention to these facts; and, indeed, in one case there was a difference in the diameter of the couplings which were being drilled together, both being at rest on the one plane. (See sketch No. 6.) The difference in the diameters was the amount the shaft would be out of line when the shaft left the shop. As to Mr. Sisson's comments on tapered bolts, he would deal with them later; but Mr. Sisson had been kind enough to correct

SKETCH No. 6.

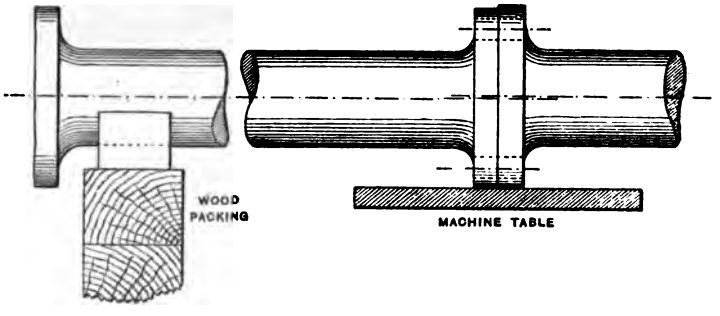

his figures. Bolt No. 3 should be $6\frac{3}{4}$ inches long, not $6\frac{1}{4}$ inches. If Mr. Sisson carefully looked into this, and allowed, say, $\frac{3}{8}$ inch projection of head, he would find he had $3\frac{3}{16}$ diameter of parallel bolt as stated by him. As to the actual design of couplings and bolts, this was beyond the province of his paper. He had assumed that the design of all the shaft couplings was theoretically correct.

Mr. J. T. Milton, in his remarks, said he preferred parallel bolts, but would be sorry to say they could not make a good job with tapered bolts—each had their advantages and disadvantages. In his paper he admitted the disadvantages of the parallel bolts—purely a question of cost of production (putting the case into a nutshell)—and this was the real gist of the matter. The cost of production had reached its minimum limit, and the cost of maintenance had to suffer, to say nothing of the great risks, losses, claims, and delays consequential to shaft failures. Here were some of the ugly features and principal objections to tapered bolts:—(1st) Deviation of the vertical or horizontal centre line of shafting on the majority of cargo steamers, owing to the variant position of above line with various cargoes, which tended at all times to prove the absurdity of having tapered bolts which, of course, offered no resistance to the shaft couplings becoming open. (2nd) No advantage could be taken of the frictional area of the surface of the coupling faces, for it was impossible to tighten up a coupling

without the use of parallel bolts, tapered bolts having no heads, hence distorted holes and slack bolts. (3rd) Owing to the difference of the area of the bolt in the coupling holes it had a tendency to become slack at the small end, on account of the insufficient area at this particular part of the bolt being of much smaller diameter and shorter in length of bearing due to the draw on the thread. (4th) Another great drawback was that when the shafting was being overhauled or lined up, the couplings were very often never drawn close together, as tapered bolts rendered it impossible to do so without the aid of the parallel draw bolts. He, of course, gave tapered bolts the credit of having given satisfaction in a number of cases; but speaking generally, and the above-mentioned objections being exemplified, it was his opinion that the sooner tapered coupling bolts were dispensed with the better for everyone concerned. In cases where tapered bolts had been successful, it was chiefly owing to a very strong vessel, or a vessel running in a constant trade with easy cargoes. As to the fitting of parallel coupling bolts: take a shop where the average size of coupling bolts was, say, 3 inches diameter:—It would be an easy matter to turn bolts out by the hundred at, say, $3\frac{1}{16}$ inches diameter, stock them, and take the last cut off to the finished diameter as wanted, say, a stiff 3 inches or an easy 3 inches, as the case might be. This was the practice in one of their first-class shops until, at least, 1888. As a practical man, he had fitted some dozens, if not hundreds, for the above shop, and the percentage of bad fits was small. These were the days when the bolt-forcing ram was more in evidence than at present. Mr. Milton was personally acquainted with the shop to which he referred. As to the outer bearing: he knew of cases where the outer bearing had been a disadvantage, and actually caused excessive wear on the inner bush. But the design of stern post at the present day was vastly different to the design of twenty years ago. The propeller aperture twenty years ago would be an approximate seven feet wide, with a mean length of sole piece of about 9 feet with 12 inches radius at the inner part of the sole piece, and a rudder post section of $6\frac{1}{2}$ inches by 11 inches. In the present day practice—ship for ship or tonnage for tonnage—they would have a 5 feet width of aperture, and practically no sole piece, due to the inner part being one series of radii or curves, and a rudder post section of 6 inches by 12 inches, and this great difference in the design strengthened the rudder post, and consequently the outer bearing. However, he withdrew his opinion on the outer bracket. Mr. Milton decidedly disagreed with

length of shaft was taking the weight of the other two lengths, hence the crushed white metal and the grooved journal as shown on the sketch No. 7. That was one of the principal causes for the couplings working. He was not losing sight of the probable developments which might be due to the flexibility of the vessel—which, in a measure, assisted in causing this condition of things. He was not necessarily habitually troubled by such very extraordinary *mal-constructions*—whatever that might mean—and he should like to see Prof. Weighton, or anyone else, deal with shaft centre lines as shown in his notes in any different manner. As to his recommendation to go to better engine builders, this advice was not necessary, for the following reasons:—Firstly, the data put before the Institution was not necessarily gathered from the fleet he had

SKETCH No. 7

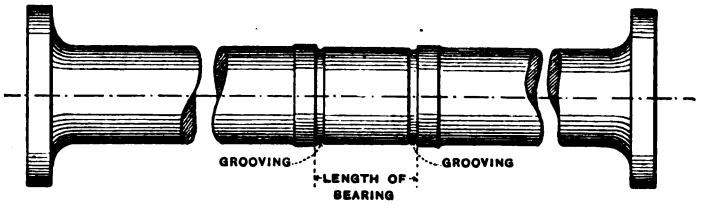

the honour to supervise. Secondly, the data represented nine different engine builders—seven, at least, had an excellent reputation and were unquestionably first-class builders. An expert, or even a chief engineer, would be very childish or foolish to come to an Institution like theirs and practically say "My bearings or bushes are worn down; what shall I do?"

Mr. Buckland in his notes spoke of a properly constituted shop. Most engine shops were properly constituted; and he (Mr. Chaston) did not object to the principle of finally reaming couplings and fitting the bolts in the shop, if the present existing methods were not so rough and ready, and too economical, seeing he wanted economy (which courted cheapness) in production. As to tunnel seats, he (Mr. Chaston) never said they were not sufficiently stayed. Up till now he had no complaints about the stools nor seatings for shaftings, and only mentioned the fact of two being loose, and gave the supposed cause of looseness developing. As to corrosion, with the present drift towards its prevention, five years hence a superintendent who was troubled with corrosion of tail shafts would, he thought, lose caste amongst his fellow supers. In conclusion, he thanked them all for their attention and patience, and he hoped his paper would do some little good.

MR. FRANK CAWS'S REPLY TO THE DISCUSSION ON HIS PAPER ON "REMARKS ON THE INCREASING FREQUENCY OF FAILURE OF PROPELLER SHAFTS."

Mr. FRANK CAWS made the following reply:—The vigorous address of Mr. Hugo MacColl, grasping firmly the commercial as well as the technical necessities of the problem before them, induced the desire that his voice might in future be often heard in these important discussions; and at the same time, both by the similarity of name and brain, it reminded many among them of the loss which this Institution still felt of one of its most devoted Vice-Presidents and founders, the late Mr. Hugh Macoll, whose voice they could hear no more. It was true, as Mr. Hugo MacColl tritely observed, that the paper was "more suggestive than dogmatic"; and it was better that it should be so, in order to attain the author's avowed object of exciting rather than of settling discussion. Still, the suggestions offered for consideration were seriously offered; and though a few of them were perhaps original to the mind of the author, most of them were simply views and opinions more or less common, which the paper served to focus for the examination of experts. It was, therefore, not surprising to find, amongst the contributions to this debate, a considerable unanimity on some of the suggestions, and an absolutely unanimous opinion that the primary cause of trouble with propeller shafts was the running of ships across stormy seas with their propellers partially emersed. On other points there was naturally some diversity of view, some agreeing and others dissenting from the suggestions of the paper; and though nothing which had been advanced in the course of discussion seemed to the author to demand the withdrawal of any one of the suggestions in question, on some of the points which had been objected to further observations were called for. The question of diameter, for instance, had been treated thus far as though an increase of diameter involved of necessity a corresponding increase of stiffness of shafting, which indeed would be so if the diameter were increased uniformly throughout the entire length from propeller to crank shaft. But the essence of true design in engineering was shown in proportioning the material of every part of a machine or structure to the stress it had to withstand, so that all parts and points might be equally strong. The fact that steamers' shafts generally break near the propeller proved that, as

regards equalising the strength of shafts throughout their length, their designers had still something to learn. Mr. Heck, at the end of his remarks, spoke the weightiest word of this discussion when he declared, if vessels were sent to sea with their propellers emersed as they often were, no increase in the diameter of the shafting would prevent them from breaking. It was perhaps with some such belief in his mind that Mr. Milton expressed the opinion that if the shafting were strengthened at the tail end it would probably break in the tunnel. If big ships in ballast were to be built so as to trim enough by the stern to immerse their propellers, as Mr. Heck advised—and no other recommendation which had been made in this discussion was so likely to put a stop to the growing frequency of failure of shafts—then it would be necessary to build those ships with finer ends, which improvement would also increase their speed, and render them at the same time less liable to that extreme bending and straining which now tried them so severely. But shipowners and shipbuilders, he feared, would not fall in immediately with Mr. Heck's advice. And in the meantime, and for all time, it was desirable that the strains of shafting should be more studied and better understood in detail and in mechanical principle than they appeared to have been hitherto, judging by their numerous failures. Mr. Hugo MacColl and several other speakers, as practical engineers, had intimated that there was really nothing except expense to prevent the increase of diameter of the tail shaft. This increase, if not extended to the tunnel shafting, might be to a less degree extended to the thrust shaft, without necessarily making the shafting as a whole more stiff and stubborn. It was easy to understand that by indiscriminately increasing the diameter of the tunnel shafting, as well as of the propeller and thrust shafts, the disposition to quarrel between the bending ship and unbending shaft might be so aggravated as to discount possibly by 100 per cent., or even more, the gain of strength due to the increase of the diameter. Probably that might account for the disappointing results, mentioned by Mr. Milton, of those shafts which had been made of 53 per cent. diameter in excess of Lloyd's rule. Mr. David Andrew pertinently observed in his letter, that, while the propeller shaft felt the torsion first and worst, "the thrust shaft comes next as a sufferer." Mr. Fothergill pointed out, and every one who understood the subject would entirely agree with him, that it was the slamming of the racing propeller back into the sea which, above all other things, smashed the shaft. Prof. Weighton dealt with the effect of a big ship's pitching period on the shafting stresses. The points wherein Prof. Weighton dissented from the

paper would be treated of further on, as would be also the attitude of Mr. Milton as to the suggested hollow shafts, and other matters. Mr. Cairns dealt with the propeller reactions in detail, but omitted to allow for the effect of the motion of the fulcrum of all those forces and reactions which he specified. These, and other, speakers and writers, dealt with numerous other phases of this many-sided question. It would hardly be desirable, even if possible, to reply in extended detail to every one of these gentlemen in a short half hour at the end of the session. The author of the paper had, however, invented an apparatus, which might be called a torsion meter, for want of a fitter name, of which Fig. 1 (Plate VIII.) is a sketch; and in a brief description of this apparatus, and its mode of working, those gentlemen who had taken more or less exception to some of the views and proposals of the paper might find their objections met and answered. It was regrettable that the time and means available to the author would not allow him to get the apparatus made, and show it that evening, actually at work; but by means of the diagram, its method might be clearly understood. The description was as follows:—The overhead beam H, supported from ceiling by the two bolts I I, sustains the cross beam J, from which the metal tank T, filled with water, is suspended by the two springs S S. An iron frame, *f f f*, is suspended from the beam H by the two springs G G. The upper ends of this frame pass up through two square holes in the beam H, and are able to slide up and down through those holes which serve as guides to keep the frame steady in its vertical path when oscillating up and down. The lower ends of the frame form journals, through each of which a short shaft works. On the outer end of one of these shafts a screw propeller is fitted, and on the inner end of the same shaft is the coupling A. On the outer end of the other shaft is the weight P, suspended by a cord wound round the shaft; and on the inner end of this same shaft is the coupling B. There is no connection between the couplings A and B, except that made by the cords W and Z. As these cords are very extensible and elastic, they give, as it were, an exaggerated, or magnified, illustration, in the various experiments to be presently described, of the effects of torsion on a single fibre of, say, an iron shaft. The word fibre is here employed, for lack of a better, to express the longitudinally continuous element of strength in any shaft, whether of a fibrous material, like iron, or of steel or of any other fibrous or non-fibrous material. In order to keep in view throughout the idea of the iron or steel shaft, these cords might be called "wires," though actual

wires would not stretch enough to render visible all the movements, changes, and tendencies induced by torsion, as now to be particularised. It might be alleged that the material of propeller shafts never actually underwent such degrees of twist as this torsion meter showed. That was quite true ; but between the torsion of the "wires" in the meter and of the material of the propeller shaft the difference was merely of degree and not of kind ; and the exaggerations of torsional strains as shown by the meter certainly exhibited, and rendered intelligible, the actual methods and tendencies of torsional stress on real shafting. Before the experiments begin, the wires W and Z are painted throughout their length with black and white alternate contiguous subdivisions, each, say, exactly 1 foot long. In what follows, let it be understood that the distance between the couplings A and B remains, throughout all the experiments, absolutely constant. In the first series of experiments the coupling A is to be rendered unable to revolve in the slightest degree (the propeller being temporarily tied up), while the coupling B is quite free to revolve. At the commencement of each experiment, the weight P is to start with its top exactly level with the top end of the graduated measuring rod R, which stands up from the floor. In each of the experiments, the descending motive weight P is to be arbitrarily arrested, when the required amount of torsion has been performed by its agency. In the first experiment let the weight P turn the coupling B half round. This will cause the wires W and Z to cross each other, half-way between the couplings, as shown by Fig. 2 (Plate VIII.). They cannot thus cross without stretching, as their diagonal length W W, and Z Z, (Fig. 2) is greater than their parallel, normal, length W and Z, (Fig. 1). The power stretching the wires to the extent of this half turn is the weight P, multiplied by the space, and divided by the period of its descent. We learn from this first experiment that torsion acts tensionally. In the second experiment allow the weight P to proceed further, twisting the two wires round and round each other several times, as shown by Fig. 3 (Plate VIII.). And now, if the painted subdivisions on the wires are examined, it will be found that every one of them is longer than a foot, and that those nearest the couplings have stretched more than those in the twisted middle. And this difference in the degree of stretch at middle and ends is quite natural, because where the wires are twisted together the friction of their parts in contact opposes motion of those parts, thereby preventing more or less their stretching ; but at the ends, where the wires are not in mutual contact, they are free to stretch, and do stretch more than in the middle. The point of greatest stretch, due

to torsion, will of course be the point of ultimate rupture. But both ends will not break at once. If the graduations are again examined, and measured with sufficient minuteness, it will be found that next the coupling A they are slightly longer than next the coupling B; and if the weight P be allowed to twist the wires till they break, they will break next the coupling A accordingly. The reason for this seems to be that at A the resistance is first encountered, and in the transmission of the effect of that resistance from A to B an infinitesimal loss of time and energy inevitably occurs, and the torsional force which reaches B is therefore slightly later and slightly weaker than that originated at A. If the mechanical equivalence of this machine, which seems obvious enough, be accepted, A is the tail and B is the thrust end, and the words of Mr. David Andrew are seen to apply: the propeller shaft is the first and the thrust shaft is the next to suffer the torsional stress. This concludes the first series of experiments, wherein, as will have been noticed, the resistance, as represented by the unrevolvable propeller, is quite absolute. The propeller will presently be liberated, and it will then be seen how that, and other conditions not yet implicated, affect the results. But, before liberating the propeller, a second series of experiments will be tried, with a larger number of wires fixed at equal intervals round the circumferences of the two couplings, and drawn strictly parallel and taut from A to B. It will be seen that the space enclosed by these wires is of cylindrical shape. And now, if the weight P be set to work to twist these many wires, it will be observed that the weight P will descend much more slowly than when twisting only two wires. But the twisting power will, as before, be still expressed by the weight P, multiplied by its space and divided by its time of descent. If the wires had no thickness at all, the torsion of a half revolution would change the cylindrical space enclosed by them to a pair of cones, with their points meeting half-way between the couplings A and B. But each wire has a diameter of its own, and when the torsion has proceeded far enough to bring them into a closed circuit, with no space between wire and wire, as indicated by the smaller ring C of Fig. 5 (Plate VIII.), then the diameter can become no smaller, and the conifying tendency is truncated, with the result roughly indicated by Fig. 4 (Plate VIII.). If the weight P be allowed (assuming it is heavy enough to do so) to continue the torsion still further, the conical slopes will become shorter, and the middle diameter will extend cylindrically, as indicated by Fig. 6 (Plate VIII). And now, if,

as a final experiment of this series, so large a number of wires were employed that, at the couplings A and B, they formed a closed circuit, with no space between wire and wire, it will be found that the weight P, however heavy it might be, would fail to twist the wires in any degree, that is to say, the resistance to torsion which the tubular form of material offers is absolute, so that there is no form of shaft in which a given material can be rendered more torsion-proof than the form of the hollow cylinder. The experiments, then, thus far, would teach that if it is required get the best resistance to torsion from a shaft of given material, length, and weight, it will be necessary to adopt the tubular form of section, and the largest diameter that practical conditions, other than torsional stress, would admit of. Up to this point no mention has been made of the modifying effect of the softness or squeezability of material on its torsional behaviour. Hitherto note has only been taken of the effects of the torsion on the longitudinal extension of the wires. This longitudinal extension is, however, accompanied by transverse compression, the measure of which is governed by the degree of hardness or squeezability of the material. It will appear at once evident, from the foregoing illustrations, that the measure of transverse compression produced by torsion is greatest at the middle of a shaft's length; and it must be equally obvious that this compression, by consolidating the material, increases its strength, and in this fact there is an additional reason why shafts of cylindrical shape are stronger in the middle than at the ends. At the same time, this squeezability of the material of the hollow cylindrical shaft [that is of a shaft consisting, so to speak, of a ring of wires of very great number, so closely in contact as to be practically homogeneous] renders its torsion-proofness less absolute than that of a hollow cylindrical shaft composed of material absolutely hard and incompressible. A solid cylindrical shaft may be regarded as a series of tubes, one within the other, each resisting torsion on its own account, and yielding thereto only so far as its softness allows. But on further examining the subject of solid shafts from this point of view, it will become obvious that the outer tubes have to endure the brunt of the twisting stress, the inner tubes being of little or no use, as their torsional resistance cannot come into full play, if into play at all, until that of the outer tube has been overcome and broken. But, after the outer skin of the shaft is broken by torsion, it is vain to expect the inner tubes, so to speak, to withstand a stress which has succeeded in breaking a strength greater than any inner tube possesses. Therefore

the best policy in this matter, the best generalship in this warfare between torsion and shafting, is to crowd the strength into the front line of defence, recognising that, if once that line be broken, the reserves are useless. This was the policy upon which the success of the Armstrong gun (and of Elswick) was largely founded. This was the reason why hollow columns had been universally adopted in place of solid pillars; and this was why old-fashioned solid beams had been superseded by tubular or flanged girders: and the more fully the search-light of science was brought to bear upon the subject of torsional stresses in shafting, the more advisable would it appear to abandon, as the paper suggested, solid iron shafts for steel hollow shafts: notwithstanding the opinion of Mr. Milton that such a proposal could not have emanated from the brain of a marine engineer. The author regarded the brain and skill of her marine engineers as a mainstay and glory of this country; and, whatever Mr. Milton or anyone else may have said to the contrary, it might be taken for granted that marine engineers will not in the future, any more than in the past, prove incapable of applying the plain teachings of science and common sense to the improvement of shafting, which, as experience demonstrated, was so defective as now made. And if by any chance some suggestion for improvement should come from an outsider, marine engineers would not scout it on that account; for they would not fail to remember that the inventor of the marine engine was not a marine engineer. But perhaps Mr. Milton meant, not that hollow shafts were impracticable in large steamers (they are already used in small ones), but that the author's suggestion that drawn steel tubes should be used for the purpose was impracticable. A few years ago everybody would have scouted that idea as impracticable. But the marvellous strides which the drawn steel tube industry had lately made were such that these tubes, with homogeneously flanged and thickened ends, were now being extensively employed, instead of cast iron, for columns of the largest diameter capable of sustaining hundreds of tons on each; and the Admiralty had now ordered such weldless tubes for the boilers of the "Terrible," "Implacable," "Irresistible," "Formidable," and the new Royal yacht. So what experts would have deemed impractical a short time ago was to-day being put into actual practice. Mr. Mace said that even X rays would fail to reveal the inner flaws of solid shafts. If shafts were of drawn steel tubes they could be examined inside and out, and tested by their ring to the blow of the hammer. Hard though steel was, it was not absolutely incompressible, and though the shrinkage of diameter towards

the middle of the shaft's length from torsional stress of a steel tube would be infinitesimal, yet even that shrinkage would not occur if a core of incompressible water were employed, which would cool as well as brace and strengthen the tube. If this water entirely filled a long shaft tube, furnished with but small inlet and outlet affording a slow current, no great head of pressure would be needed, as Mr. Cairns feared, to render it an effective core; and for cooling it would be much more effective and less complicated than jackets merely at the bearings. [By the way, Mr. Cairns charged the paper with advocating stiffness, though the paper expressly deprecated it.] Passing on from these to further experiments with the machine (Fig. 1 Plate VIII.) in order to illustrate the bearing of certain dynamical principles, regarding the endurance of shafting, which had been the subject of some differences of view and opinion in the course of the discussion; [though to do justice to such principles more weeks would be needed than there were minutes now available at the end of this reply] the propeller in these last experiments would be untied; so that nothing, except the friction of the machine and the resistance of the water to the movement of the propeller could prevent the coupling A revolving along with the coupling B at the bidding of the weight P. The apparatus, as shown by Fig. 1 (Plate VIII.), would not admit of the tank being raised to any desired height, without bringing its upper edge foul of the propeller shaft. But, for purposes of illustration and argument, this unavoidable defect must be overlooked, and it must be presumed that the tank can either rise high enough to bury the propeller deeply under water, or sink low enough to leave the propeller wholly in the air. Let the tank, in the first experiment of this final series, be suspended motionless at such a level as to leave the propeller half out of water. The weight, P, in this machine is equivalent to the pressure of steam moving a steamer's pistons; and as the power developed by a steamer's engines under a given pressure varies with the speed of pistons, so the power developed by the weight P would be shown by its speed of descent. If the descent of P be watched as it drives the half emersed propeller, then there will be observed a certain unevenness in its downward speed after it has got fully under weigh, showing the unevenness of the resistance it encounters. Such jerky stresses, though not violent enough individually to strain the shaft to any appreciable degree, on long voyages tend, by repetition, to fatigue the shaft and shorten its life. The torsion on the shaft was determined by the resistance, and changed as the resistance

changed. The rate of change which the elastic strength of the shaft's material would endure without damage was limited by the accelerative principle which was common to elasticity in all materials. Many an elastic body—a carriage-spring, for example—had its molecular constitution disorganised and crystallised, not by the measure *per se* of the stretch to which it submitted, but by the forced pace which compelled the material to stretch to that small measure in too short a time. Thus, even when revolving in smooth water, a half emersed propeller might, by a continuous series of little shocks, gradually ruin the elastic strength of the shaft. Mr. Percy Willcox, in his very able remarks, alluded to this subject of fatigue, quoting Prof. Unwin as an authority, But now as an experiment, to show how the shaft fares in a sea-way with the propeller normally half emersed, let the tank of water, suspended on the springs S S, oscillate up and down at a period, depending on those springs, which is equivalent to the period of the ocean wave. By increasing or decreasing their load, the operator could correspondingly alter the period of the springs' oscillation so as to represent any desired period of sea wave. Let the vertical range of oscillation be made sufficient to alternately leave the propeller clean out of the water and bury it deeply under water. As the propeller was relieved of the water resistance, the weight P would increase very rapidly its speed of descent, developing enormous power with which the propeller, racing at a wild rate, must strike the rising wave with awful force, whereupon the descent of the weight P would be suddenly arrested to a greater or less extent, just as in the case, so powerfully and plainly portrayed by Mr. Fothergill, of a propeller, under ordinary conditions making 60 revolutions, suddenly while racing increasing its rate to 120 revolutions, and striking the sea with that gathered force and actually bringing the engines to a dead stand. Surely everyone who had joined in this discussion and, as before remarked, every other person who had a reliable opinion on the subject, must entirely agree with Mr. Fothergill in pointing to this kind of thing as accounting for the great majority of shaft accidents But some might ask, how was it that the steam cushion behind the pistons did not break the force of the impactive blow ? Another glance at the behaviour of weight P would give the answer. Before weight P could be arrested in its swift descent, the reaction of the propeller's violent blow on the sea must be conveyed to weight P, by means of increased torsion on the shaft. But that sudden and terrible access of torsion, due to the violent action of P at one end of the shaft, and to the equally violent simultaneous resistance of sea at the other end, was the very stress which broke the shaft ; and as for the steam cushion it had no time to act, except by way of "locking

the door after the horse was stolen." None of the speakers in this discussion had ventured to deny the statement of the paper, that the percentage of shaft accidents in leviathan steamers largely exceeded the percentage of these accidents in steamers generally. But several gentlemen, and particularly Mr. Milton and Prof. Weighton, remarked that they were not convinced of the fact. For the consideration of those sceptical gentlemen, it might be mentioned that during the year 1898, when the number of leviathan steamers actually trading was not nearly so great as it is now, out of 175 shaft accidents to steamers 14 were in the cases of leviathans. Now, it was absolutely certain that even to-day (and much less a year ago) the number of leviathans as compared with the total number of cargo steamers afloat was not nearly so large a proportion as 14 in 175. Therefore the writer submitted that the statement in question could not reasonably be doubted. The contention of the paper, that these leviathans, with their comparatively small power of engines and correspondingly small shafts, were more liable to shaft accidents than ordinary tramps, was doubted by Mr. Cairns and more positively disputed by Prof. Weighton. The machine (Fig. 1, Plate VIII.) would serve at least to illustrate the points about which these gentlemen contended. As the period of the springs S S, was equivalent to the ocean wave period, so the period of the springs G G, might be regarded as representing the ship's pitching and rolling period. And it would be seen that these two periods had no power of mutual compromise, and were quite independent of one another. The pitching and rolling period of ships of similar form, and load-line similarly proportional to dimensions, must vary as the square root of displacement weight. This principle also was expressed in the machine (Fig. 1, Plate VIII.) as regarded the period of the springs G G, which (as in the case of ships) varied as the square roots of the weights which these G G springs sustained. Let all the weights, including L, suspended from the springs G G, have a total weight double that of the weight marked L. So that by detaching and removing L the weights hanging on G G springs would be thereby halved. When L was attached the period of the G G springs would be $\sqrt{2}$ times longer than when L was not attached. Likewise, when a leviathan ship's displacement weight was double that of a similar ship similarly loaded, the pitching and rolling period of the leviathan would be $\sqrt{2}$ times longer than that of the other vessel. Thus, when experimenting with the torsion meter, if L were unattached the torsional results would represent the case of an ordinary tramp steamer's shaft; and if L were attached the torsional results of experiment would represent the case of the shafting of a leviathan tramp of double the displacement weight of

the other steamer. Experiments with this meter would reveal the relative torsional effects of synchronism, and of various degrees of non-synchronism, between the ship period and wave period. But that was a subject which had not been dealt with in this discussion, and, interesting and important though it was, time now forbade entering upon it. What the discussion had touched on, and what all interested persons just now were concerned to decide, was the question whether the additional displacement of the leviathan, of which the added weight L was in the meter, the proper equivalent, had the effect of increasing, or decreasing, the torsional stress on the shaft. That was a question which could at once be settled by considering the behaviour of this machine, with and without the weight L. By attaching the weight L, the period of emersion of propeller due to ship's pitching and rolling was prolonged, by no less than 41·4 per cent., where, as in the example above cited, the addition of L was equivalent to doubling the displacement weight. During that 41·4 per cent. additional period of racing the immersed propeller gained 41·4 per cent. more speed than it would gain in the case of the smaller displacement, and consequently encountered double the resistance on re-entering the water; that was to say the resistance to the racing propeller (all other things being similar) varied directly as the displacement; and it followed of necessity that the torsion, which was due to the reaction of that resistance, varied at the same rate. And, for this reason alone, the writer submitted that the paper was justified in urging that in Lloyd's rules for determining the diameter of propeller shafts the displacement, as a governing element of torsional stress, ought not to be ignored. But besides this reason there was another which reinforced the first. If a ship were of very small displacement she would lift to the plunge of the racing propeller, and so relieve the shaft of torsion to some extent; but the lift of a leviathan steamer's mass to the blow of its propeller was too small to afford a very sensible measure of such relief, and thus the shock was almost wholly felt, as additional torsion suddenly imposed on the tail-shaft, which, being nearest the source of shock, naturally broke, just as the wooden handle of a spade which was slammed flat on water would break off next the spade. The author hoped and believed that if Prof. Weighton and Mr. Cairns would, with their characteristic patience and high ability, examine the torsional problem by the methods thus outlined, any difference of view which might have temporarily influenced their judgment of the doctrines and suggestions of the paper would disappear. Several speakers referred to the momentum of the propeller's own mass when racing as an element of mischief, and Mr. Willcox proposed to reduce the weight of propeller to the extent of 8 per cent.

in cast iron or 25 per cent. in phosphor-bronze. It might be added that a thinner propeller blade would, by bending more than the thick one to the resisting force of the water, undoubtedly give the shaft relief, by affording it more time to take on the inevitable addition to torsional stress; and on that account alone, to say nothing of its higher propulsive efficiency, a thin bladed propeller was undoubtedly preferable, and well worth paying extra money for in most cases. There was little or no need to entertain the theory that the ring of corrosion round the shaft next the ends of the liners, and especially of the after liner, was due to galvanic action arising from the employment of brass and iron together. That corrosion could be accounted for by remembering that the water lubricant within the stern tube, and especially in tubes which were half out of water, being churned and tormented to the foaming point by the rotation of the shaft and by the forward speed, combined with the pitching and rolling, of the ship, the oxygen, liberated by the foaming, seized with avidity on those points of the shaft's skin which betrayed, as Mr. Fothergill so clearly described them, incipient rupture. And from those minute sores of the skin the corrosion rapidly extended. If the lubricant were oil, the combined motions of shaft and ship would not induce lathering; and even if they did, it must be remembered that a given quantity of water lubricant lashed into foam would liberate at least ten times the weight of oxygen that an equal quantity of oil could possibly liberate. Since Mr. Milton, at the Sunderland meeting of this Institution, recommended nickel steel as best for shafts, a steamer fitted with a nickel steel shaft, in place of her previous shaft which she had broken, had now broken her nickel steel shaft also. That fact must speak for itself. In conclusion, the author tendered to Mr. Chaston his humble apology for having, quite unintentionally, been instrumental in dividing the time of the discussion, which might well have been devoted wholly to Mr. Chaston's paper; and yet it was matter for congratulation that the two papers had not overlapped in their treatment of so difficult, important, many-sided, and deeply interesting a subject.

The PRESIDENT, in moving a vote of thanks, said Mr. Chaston and Mr. Caws had taken a vast amount of trouble and written papers for their instruction and interest. They had had a very useful discussion upon them. He thought there had been no papers that session more worthy or deserving of a very hearty vote of thanks than the papers given by Mr. Chaston and Mr. Caws. He moved accordingly.

The vote was accorded by acclamation, and conveyed to both gentlemen by the President.

MR. W. E. COWENS'S REPLY TO THE DISCUSSION ON HIS PAPER ON "SHOP AND GENERAL ESTABLISHMENT CHARGES IN ENGINEERING WORKS, AND THEIR RELATION TO COSTS AND ESTIMATES."

Mr. W. E. Cowens begged to thank those members who had discussed the paper for their valuable remarks. Mr. Fownes did not agree with charging the machines at so much per day. Well, he still held that this should be done if accurate cost was to be obtained; and if forgemen could not do this, owing to low prices, he thought they ought to put their heads together and hold out for better prices.

He agreed with Mr. Mulherion that the question of charges was entirely a commercial one; but if he meant to infer that they were therefore outside the province of the works manager he was afraid he must differ from him. He noticed, however, that Mr. Mulherion, while deprecating the juggling feats of directors in regard to depreciation, practically advocated this very practice in regard to shop and establishment charges. He was aware that no one method would meet all cases, but having once decided on the method they were going to adopt, they could no more afford to juggle with it than they could with their depreciation; in fact, to his mind, it was much more dangerous. In dealing with depreciation there were a good many things to be considered which were not always understood by anyone looking at the balance sheet. For instance, in a large works the average amount spent in repairs to keep the works fully efficient may be, say, £8,000 per annum. If extraordinary repairs were done which brought this amount up to £10,000 or £12,000 per aunum, he thought the directors were justified in reducing the amount set aside for depreciation in that year *pro rata*. Mr. Mulherion also misunderstood the paper in regard to the interest on outlay on boilers. He did not say that no profit should be made on boilers, but that the supplying departments should not make a profit from other departments for steam supply. In apportioning the boiler power to the machines he would add the interest on outlay in the same way as in the engine cost in Table II., page 226.

Mr. Seaman's remarks were very much to the point, and he entirely agreed with them. He was aware that no one system could be formulated which would meet all cases; and in the works he had the

honour to be connected with, nearly each department had its own system. With regard to the foundry, they had had the same experience, and had found it necessary to take the charges both on labour and also on a tonnage rate. This referred to their general foundry only. In the pipe foundry the charges were apportioned on a tonnage rate only, the rate varying in accordance with the class of work.

He felt much indebted to the President for his remarks on the paper, and particularly for those in regard to the method adopted in his own works. The method of dividing the shop and establishment charges seemed to him particularly valuable, as it met the difficulty of dealing with work bought outside to supply some detail requirement of the customer, and which were usually included in the prime contract. His experience had been that there was often trouble with these minor details which entailed expense which it was difficult to obtain from the sub-contractor, and this method would assist in meeting such outlay. With reference to the charges upon a man working at a machine, the percentages given were for men at the vice and labourers only. The daywork price for the machine covered the machinist's time also, as shown in Tables IV. and V., page 227. If the percentages were taken to apply to machinists and lathemen, then a separate item would be required in the estimate and cost for "use of machines." In conclusion, he wished to acknowledge his indebtedness to Mr. Towers and Mr. Winter for the kind assistance they had given him in the details for the paper.

The PRESIDENT said he was sure they would also give a sincere vote of thanks to Mr. Cowens for his interesting paper, and there was no doubt that for all scientific men it was a very great thing to look into the commercial side of things, and to see how all these collateral expenses were charged. He begged to propose a most hearty vote of thanks to Mr. Cowens for his paper.

The motion was carried by acclamation.

CLOSING BUSINESS.

APPOINTMENT OF AUDITOR.

Mr. W. G. SPENCE had great pleasure in proposing that Mr. R. W. Sisson should be elected again Auditor for the coming year. He had been so since the beginning of the Institution, and all through they had every reason to be satisfied with his work.

Mr. E. C. CHASTON seconded, and the nomination was accepted *nem. con.*

NEW COUNCIL LIST.

The PRESIDENT declared the names of the gentlemen elected to fill the vacancies in the Council list as follows :—

President—SIR B. C. BROWNE, D.C.L., J.P.

Vice-Presidents—MESSRS. W. H. DUGDALE, HENRY FOWNES, and SUMMERS HUNTER.

Hon. Treasurer—MR. G. E. MACARTHY.

Ordinary Members of Council—MESSRS. W. C. BORROWMAN, ALFRED HARRISON, ANDREW LAING, DAVID MYLES, and C. H. REYNOLDS.

THE EX-MEMBERS OF COUNCIL.

Mr. F. CAWS had great pleasure in proposing a hearty vote of thanks to the retired members of Council. He was sure they must all feel indebted to those gentlemen during their term of office, and only regretted that they could not been re-elected.

Mr. W. STAFFORD seconded.

The PRESIDENT said they were sorry to lose the services of the past members of Council who had, by rule, to retire. They were extremely grateful to them for the good work they had done.

The motion was cordially carried.

THE GENERAL SECRETARY.

Mr. J. K. SINTON proposed a hearty vote of thanks to their worthy Secretary (Mr. Duckitt), who had done herculean work since the commencement of the Institution.

Mr. DE RUSETT had much pleasure in seconding, and the vote was carried by acclamation.

The PRESIDENT formally declared the fifteenth session closed.

REPORT OF THE REPRESENTATIVES OF THE NORTH-EAST COAST INSTITUTION OF ENGINEERS AND SHIPBUILDERS ON LLOYD'S TECHNICAL SUB-COMMITTEE FOR SURVEYORS.

Our last report was issued in August, 1896, and since that date the proceedings of the committee have been somewhat uneventful.

SHIPBUILDERS' REPORT.

6TH APRIL, 1897.

Equipment Number of Turret Deck Vessels.—A method of determining the equipment number for vessels of the turret-deck type was arrived at.

30TH NOVEMBER, 1897.

Anchors.—An alteration was made in the number of bower anchors to be carried in large steamers. The number of hawsers and warps required in new steamers was reduced. The chief surveyor was requested to get out a scale of increased weights for anchors in vessels of large tonnage, it being felt that the present requirements were inadequate. It was also agreed that Table 22 should be extended in order to provide for larger vessels.

Floor Plates.—It was agreed to recommend that the floor plates before the three-quarter length of vessels be fitted to every frame, or the side keelsons gradually converged toward the centre keelson, to prevent the weakness which has been shown in certain vessels running light in the Atlantic,

Testing of Watertight Bulkheads.—The chief surveyor proposed that all watertight bulkheads should be tested by water from a hose, and this was carried, although it was opposed by several members of the Sub-Committee. This was, at a later meeting, made optional, several associations having raised great objection to it.

29TH MARCH, 1898.

Tank Margin Plates.—The question of attachment of the frames to the tank side plate was raised by the chief surveyor. Certain proposals were made, but the committee felt that these suggestions did not

sufficiently discriminate between vessels of the ordinary type with decks and tiers of beams and those in which beams are dispensed with. The matter was therefore referred back to the chief surveyor, so that he might have an opportunity of making proposals which would be satisfactory for all kinds of vessels.

29TH NOVEMBER, 1898.

Tank Margin Plates.—This meeting considered Mr. Martell's further proposals with respect to tank margin plates, and with certain slight alterations agreed to his proposals. The depth of margin plate is now clearly fixed in ships with the ordinary number of decks and for ships in which hold beams are dispensed with. An allowance in the width of margin plate is also made where the connections between the tank knee plate and the margin plate are of specially satisfactory character.

The discussions have been carried on in a very agreeable manner, and the members of Lloyd's Committee have, in all cases, received our remarks with the utmost consideration.

(Signed) ROBERT THOMPSON.
HENRY WITHY.

8th December, 1898.

ENGINEER'S REPORT.

6TH APRIL, 1897.

Strength of Boiler Plates.—It was agreed that the proposed increase of strength of the material of shell plates and longitudinal stays as prescribed in the society's rules for steel boilers from the range of 26 to 30 tons per square inch to the range of 27 to 32 tons per square inch, be approved. If the shell plates are to be flanged or welded the ultimate strength is not to exceed 30 tons per square inch.

Casualties to Propellers and Shafts of Steam Vessels.—It was agreed that the present rules be amended by retaining the present sizes for crank shafts and the straight parts of intermediate shafts, and that the thrust shaft under the collars be required to be the same size as the crank shaft tapered off at each end to the same sizes as the intermediate shafts; and further, that the screw shaft be required to be twenty-one twentieths of the diameter of the crank shaft. Also, that the stern bush be required to be at least four diameters of the screw shaft in length, and that it be recommended in the rules that the after liner of the shaft should overlap the bush at the forward end by about half the diameter of the shaft,

being tapered in thickness at the part not bearing on the bush, and that the shaft should be lapped or protected at the ends of the liners or should be covered with a brass liner extending the whole length of the stern tube, the liner joints, if any, being lapped and burned.

30TH NOVEMBER, 1897.

Examination of Tail Shafts.—It was agreed that all tail shafts be required to be drawn and examined at intervals of not more than two years.

3RD DECEMBER, 1898.

It was agreed that the modification proposed to be made by Messrs. J. Brown & Co., in the section of the ribbed or Purves furnace, designated "cambered rib furnace," be allowed by the society's rules to be worked to the same pressure as a Morison furnace of the same diameter and nominal thickness.

(Signed) WILLIAM BOYD.
F. C. MARSHALL.

8th December, 1898.

MEMOIRS.

SIR WILLIAM GRAY, D.L., J.P.

The life of Sir WILLIAM GRAY forms a fitting illustration of what may be accomplished by self-help, industry, energetic initiative, and perseverance; for from a comparatively humble beginning, Sir William, in the course of his long and active life, had raised himself to a position so eminent and honourable as to be at once the pride and envy of his fellow men, and this not merely by a lucky accident or stroke of fortune, but by keeping in front of him a steadfast purpose, towards which he worked with untiring energy and indomitable determination to succeed. The result of his life's work leaves him acknowledged as the chief agent in the marvellous development of the town of West Hartlepool—a large, prosperous, and growing industrial community, which was little more than a few scattered cottages when he first settled in that neighbourhood. In conjunction with the founder of the town, the late Mr. Ralph Ward Jackson, Sir William shares the high honour of having had a statue of himself publicly erected as a recognition of his invaluable services to the town and port—an honour all the more pleasing because not posthumous. It was originally intended by the committee who had charge of the arrangements to publicly unveil the statue, and Lord Durham had kindly consented to perform the ceremony, but out of respect to the wishes of Sir William Gray and his family, the public function was waived, although much to the disappointment of the members of the committee and the town generally. It was therefore simply but formally unveiled by the Mayor of West Hartlepool in March, 1898.

Sir William Gray was born at Blyth in 1823, and was the son of Mr. Matthew Gray, draper, of Morpeth. He was educated at the famous academy of the late Dr. Bruce in Newcastle. After his school days he first served some time in his father's draper's shop at Blyth, but in 1844 opened a small establishment in the same business in Hartlepool, from which the large concern known as Gray, Peverell, & Co. has grown. At Hartlepool he gradually won for himself a position which justified him in launching out into more ambitious paths. Beginning by investing little by little in the shipping industry, he felt his way till he was able to enter upon a career which destined him to become so noted a

shipbuilder and shipowner. In 1862 he joined the shipbuilding firm of Messrs. Denton & Co. as a partner, and ten years later the death of Mr. Denton led to a reconstruction of the firm, under the title of Messrs. William Gray & Co. Sir William was till his death at the head of the firm, which has now three large yards, covering some fifteen acres in extent, from which as far as 65,000 tons of shipping have been turned out in a single year. These yards give employment to about 4,000 men. The north and south yards of the firm cover about ten acres, and are arranged for six building slips varying from 270 to 340 feet in length. The yards are fitted up with the most modern machinery for carrying on the works in an expeditious and economical manner, including special hydraulic machinery for flanging, riveting, and punching out large manholes. These are now largely driven by electric power. In the yards are shops for carrying out the whole of the requirements necessary for iron and steel shipbuilding and repairing. The whole of the yards are fitted up with the electric light, which is made available for lighting up underneath the bottom as well as inside ships under repair. There are also two large graving docks opening into the wet docks, thus giving the advantage of being able to dock and undock at any time of the tide. The Central Shipyard covers about five acres, and is laid out for ships of 500 feet. This yard is fitted with the most modern tools, most of them driven by electric power, and has five berths capable of building steamers up to 500 feet in length.

Upon the death of his son, Mr. Matthew Gray, in 1896, the West Hartlepool Steel and Ironworks, which were remodelled by that gentleman in 1881, were taken over by Sir William Gray, and were carried on by him under the same title. Sir William continued the improvements and extensions which were begun prior to the death of Mr. M. Gray. As an adjunct to the shipbuilding yards, he established some years ago his extensive Central Marine Engine Works, from which a large number of modern engines are turned out, not only for the firm of Gray & Co., but to the order of other eminent shipbuilders.

Sir William Gray was always too broad-minded, as well as too large-hearted, to confine his talents merely to the forwarding of his own business. His robust health and wealth of talents had enabled him to take a great part in social, religious, political, and municipal life. As long ago as 1862 he was Mayor of Hartlepool, and in 1887 he was elected as the first Mayor of West Hartlepool. It was in 1890 that he received the honour of knighthood. Up to the time of his death he was Chairman of the Port and Harbour Commissioners, and was for years

the leading spirit of the East Coast Marine Insurance Association; an active and useful member of the Hartlepools Chamber of Commerce, a J.P. for the county, of which he was High Sheriff a very few years since, and was also a D.L. In addition to this he was a Director of the North-Eastern Railway, and in conjunction with Mr. G. Pyman, Sen., was one of the founders of the West Hartlepool Free Library. He was a leading member of the Committee of Lloyd's Register for many years.

He became a member of this Institution in October, 1888, when the Institution paid its first visit to the Hartlepools on the invitation of Sir William, who was then Mayor of West Hartlepool, and several of the leading engineers and shipbuilders of that district. The members of the Institution were entertained to dinner, Sir William (then Mr. William Gray) occupied the chair on this occasion. For several years and up to the time of his death, he held the position of Vice-President of the Institution. He died on the 12th of September, 1898, in his 76th year.

MR. WILLIAM MENZIES.

Mr. William Menzies, who was the son of Mr. George Menzies, shipbuilder, of Leith, was born at that port on the 7th of January, 1840. He served part of his term of apprenticeship with Messrs. S. & H. Morton, and the latter part with Messrs. Hawthorn & Co., both of Leith. He then came to Newcastle-upon-Tyne, and worked as a journeyman with Messrs. R. & W. Hawthorn, Forth Banks. Thence he went to Messrs. The West Hartlepool Steam Navigation Co., by whom he was employed as a sea-going engineer, and obtained a second-class Board of Trade certificate. After this he returned to Messrs. R. & W. Hawthorn, by whom he was engaged as outdoor foreman, being chiefly employed in the erection of marine engines on board ship; and latterly was appointed manager of their works at Forth Banks.

In 1870 he started business on his own account in Newcastle-upon-Tyne as a consulting engineer and marine surveyor. Subsequently he was associated in partnership with Mr. Charles Blagburn until the year 1888, when the partnership was dissolved. He continued the business himself, and some time previous to his death he took into partnership two members of his staff, Mr. Stenhouse and Mr. Wakenshaw, by whom the business is still carried on. He chiefly confined himself to marine engineering matters, though often consulted upon other departments of engineering work and valuations. He was held in high esteem by the principal steamship owners on Tyneside; and was also engaged as a surveyor of damage for London underwriters.

He joined this Institution when it was founded in 1884, and continued a member up to the time of his death, which took place on the 18th of August, 1898. He was also a member of the Institution of Mechanical Engineers of London.

MR. THOMAS MUDD, J.P.

Mr. THOMAS MUDD was born in Kirby Fleetham, a small village in the north of Yorkshire, in the year 1852. He had been identified with the engineering profession since the age of sixteen, at which time he entered the works of the Darlington Forge Company. In the year 1872 he secured an appointment as draughtsman in the engineering establishment of Messrs. T. Richardson & Sons, of Hartlepool. Ten years later (in 1882) he was appointed by the late Sir William Gray, of the old-established firm of Messrs. W. Gray & Co., to design, erect, and manage a new marine engine works, now known by the name of the Central Marine Engine Works, at West Hartlepool. The plan and construction of these works were fully dealt with in a paper read by him before this Institution (North-East Coast Institution of Engineers and Shipbuilders) in the year 1886. These works, which may be considered the most complete establishment of the kind, cover an area of about eight acres and employ about 2,000 workmen. When the shipyard and engine works of Messrs. W. Gray & Co. were turned into a private limited liability company in 1889, Mr. Mudd was accepted as one of the seven members forming the partnership, and in 1894 he was elected a director. About the year 1895 Mr. Mudd introduced his patent five-crank engines, the first set of which were fitted to the s.s. "Inchmona" in the year 1896, and the second to the "Inchkeith" in 1899. These have proved themselves most economical, the average consumption of coal at sea per indicated horse-power being less than 1·15 lbs. In the construction of marine boilers he introduced the plan of welding and flanging the cylindrical shell plates and riveting flat end plates to them, which are also welded at the corners of thin seams, thus doing away with the joggling of one plate over another. Another useful invention introduced by him was his patent preserver sleeve for the tail shafts of marine engines.

Mr. T. Mudd was a member of most of the leading scientific institutions of the United Kingdom, and to some he has contributed papers on engineering subjects of no mean value. He joined this Institution in March, 1886, and for some years was a member of the Council.

Independent of his profession as an engineer, Mr. Mudd took considerable intererest in public affairs. In 1889 he entered the Town Council of Hartlepool, and in 1895 he was chosen to be Mayor, and was twice re-elected to the office, which he held up to the time of his death, which took place in the very prime of life, after a brief illness, on the 17th of May, 1898.

By his death the engineering profession lost one who may be said to have been considerably in advance of many of his compeers, and to whom many looked for further advancement and success in the intricate problems of marine engineering. "To all who knew him personally, his upright character, his kind and pleasant demeanour, his bright and cheerful manner, his lofty aims in life will be the most gracious and pleasant memories of all." He took a lively interest in the advancement and welfare of those who had the honour of serving under him in the pursuit of their profession, and doubtless one and all will reverence his memory.

MR. JAMES WAIT.

Mr. JAMES WAIT was born in 1823. He was apprenticed to the firm of Messrs. James & John Wait (his father and uncle), engineers, North Shields. This firm engined some of the earliest steam tugs built for the rivers Tyne and Thames, and sundry seaports of the United Kingdom. While serving his time with the above firm they invented the disconnecting arrangement applied to the engines of paddle steam tugs, by which means the two engines can be disconnected and admit of one paddle wheel running ahead while the other runs astern simultaneously, thus enabling these vessels to be much more easily handled, but they did not patent the invention. This invention is still in use in the ferry steamers running between the harbour boroughs of the River Tyne.

After spending some years in the engineering profession, he entered into partnership with his cousin, Mr. John Wait, as sailing-ship owners, and about the year 1870 they went into steamship owning, in which business he was interested at the time of his death, which took place on the 10th of February, 1899.

Mr. James Wait became an Associate of the North-East Coast Institution when it was founded in November, 1884, and though not an active member he took great interest in its proceedings.

FIG. 4.

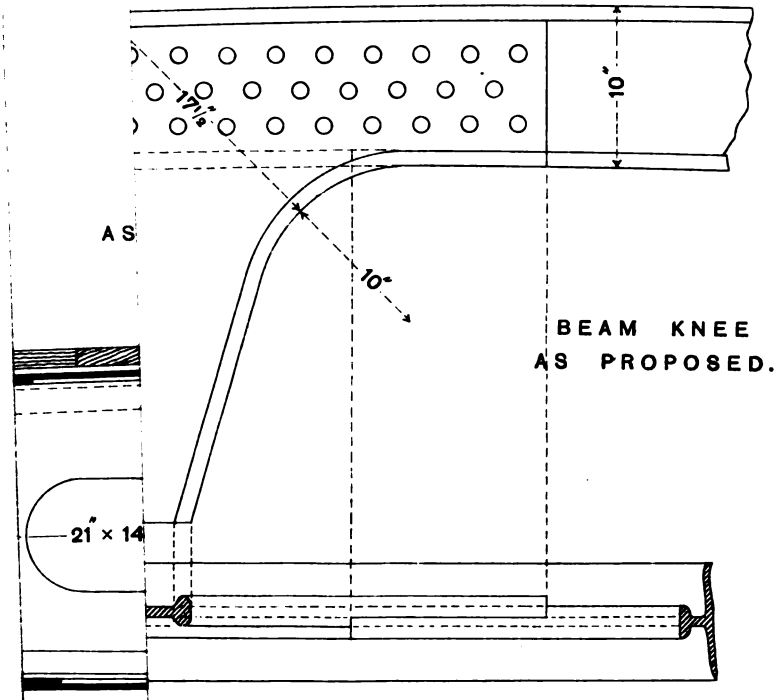

BEAM KNEE
AS PROPOSED.

FIG. 2.

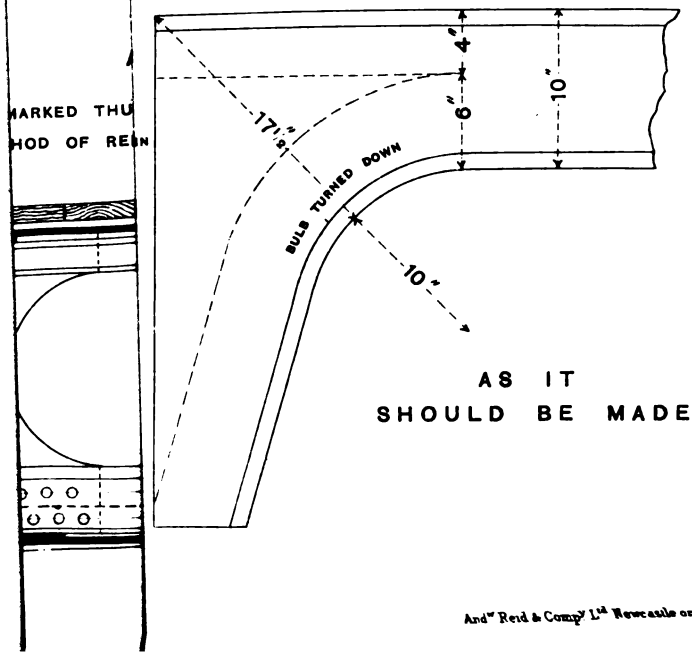

AS IT
SHOULD BE MADE.

And^w Reid & Comp^y L^td Newcastle on Tyne

nproved

FIG. 2.

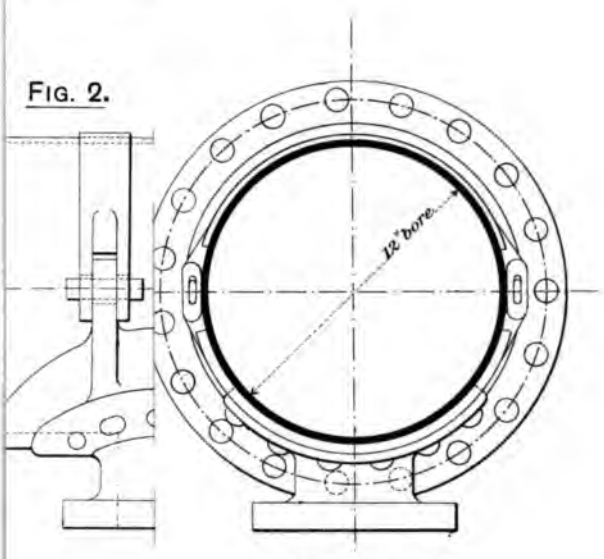

SECTION AT A.B.

NG COTTERS
DS.

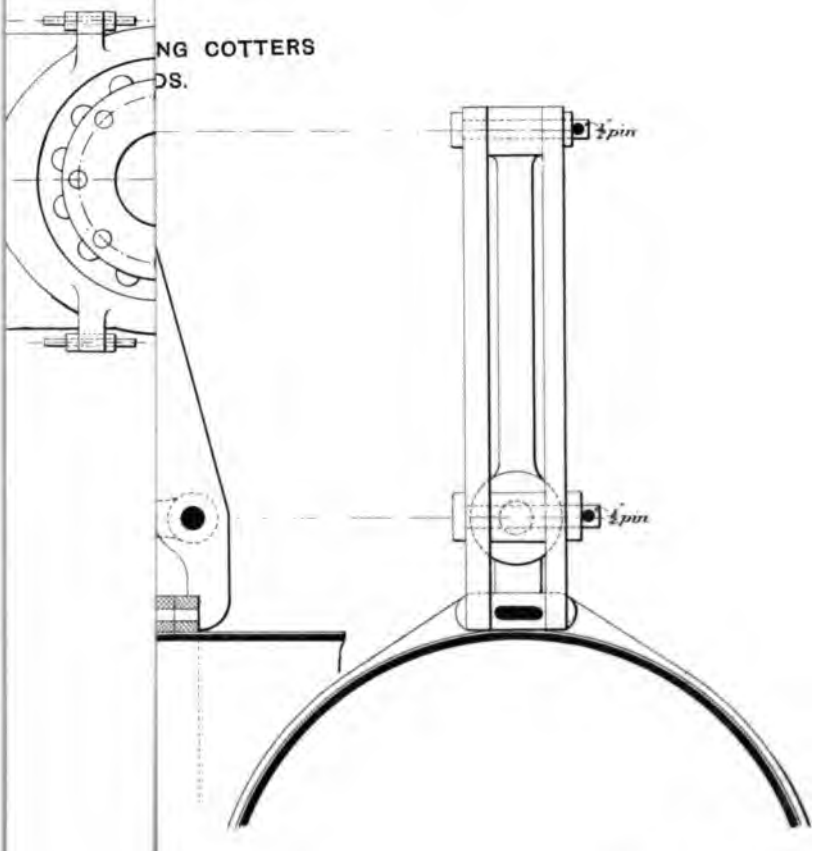

Lith. Reid & Compy. Lt. Newcastle on Tyne

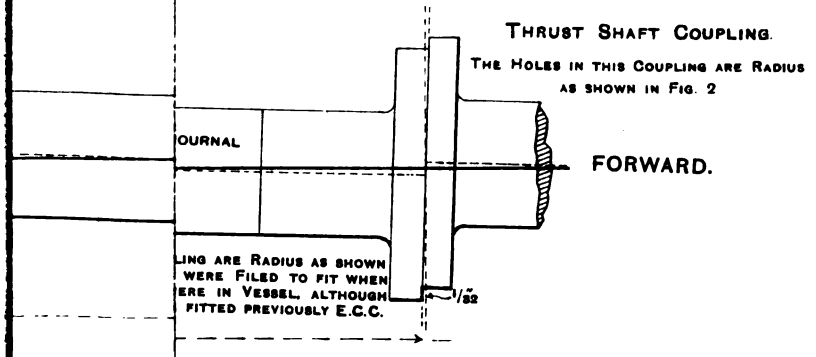

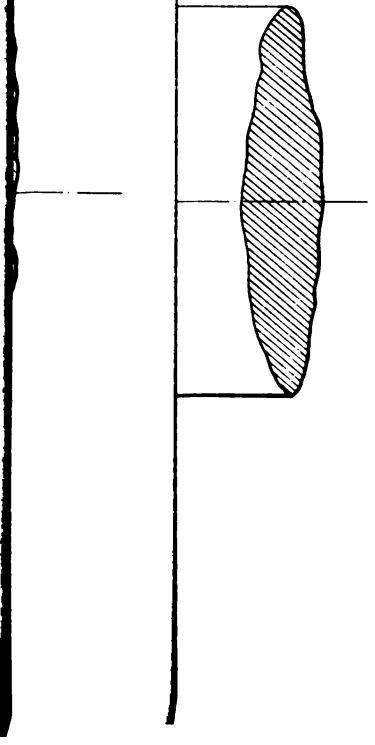

Andw. Reid & Comp.y L.td Newcastle on Tyne

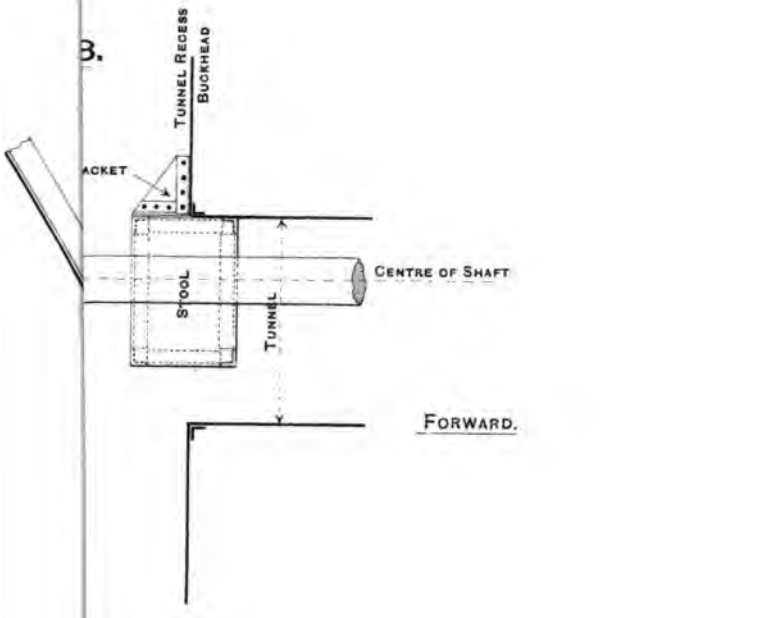
B.
Tunnel Recess
Buckhead
acket
Centre of Shaft
Stool
Tunnel
Forward.

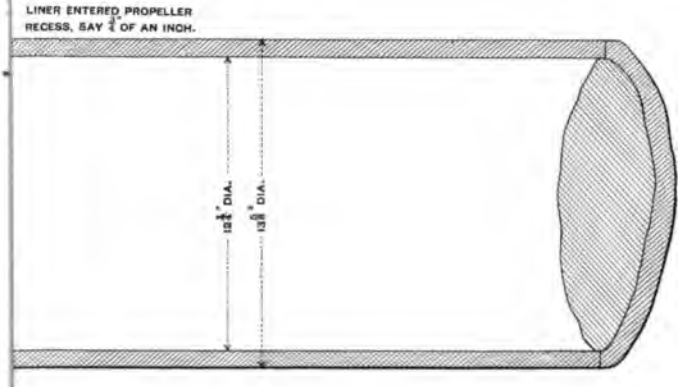
Liner entered propeller recess, say ¾" of an inch.
12¾" dia.
13⅜" dia.

To illustrate Mr. E. C. Chaston's "Notes on Shafting for Screw Steamers."

FIG. 1.

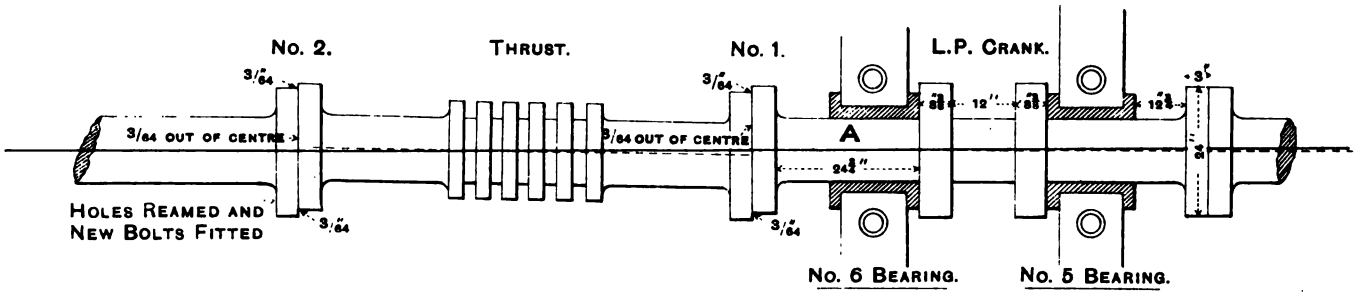

ORIGINAL DIAMETER OF COUPLING BOLTS, 2 3/4"
DIAMETER AFTER HOLES RIMMED OUT TRUE, 2 7/8" FULL.
No. 5 BEARING 1/32 LINER FITTED UNDER BOTTOM.
No. 6 BEARING MACHINED ON TWO SIDES AND 1/4" LINERS PINNED ON.
DO. DO. MACHINED AT BOTTOM AND LINERS 3/16 FITTED.

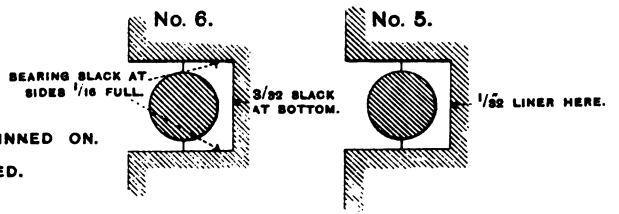

BOTTOM PLAN OF No. 6 BEARING.

SKETCH OF REPAIRS TO SHAFTING.

Proceedings N.E.C.I.E.&S. 1893
Session XV

o. 4.

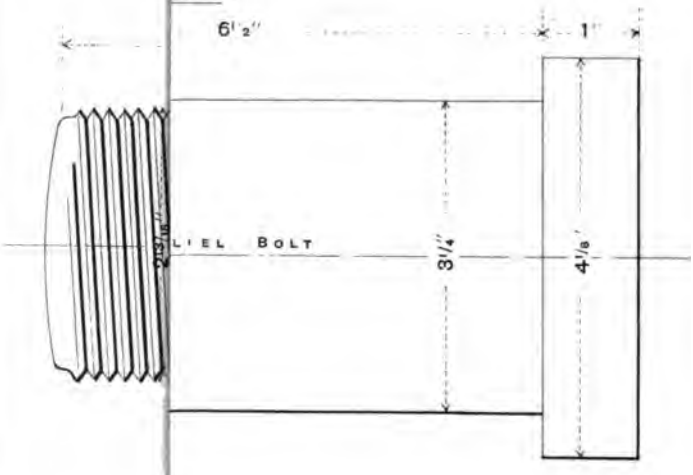

OWING STERN FRAME WITH
ER RISE OF SOLE PIECE AND
BEARING TO TAKE PROPELLER.

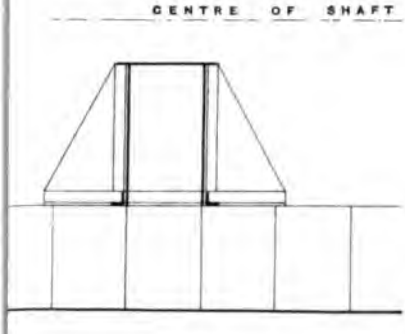

To illustrate Mr. J. W. Donovan's Remarks on Mr. Caws' Notes on "The increasing frequency of failure of Propeller Shafts."

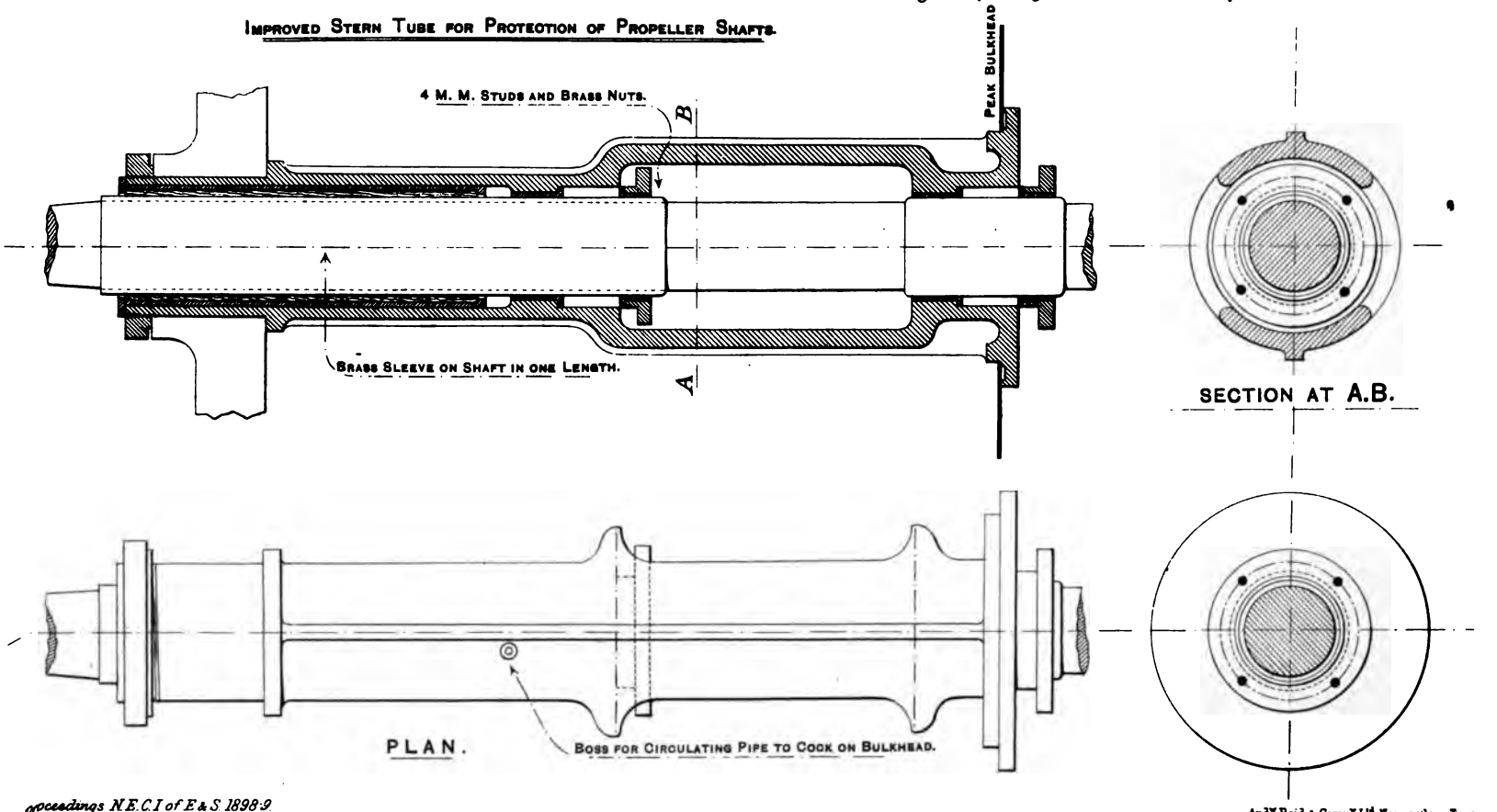

And.w Reid & Comp.y L.td Newcastle on Tyne.